DOCUMENT RESUME

ED 195 698 CE 027 179

TITLE Industrial Enterprise Handbook. The Wisconsin Guide to Local Curriculum Improvement in Industrial Education, K-12.

INSTITUTION Wisconsin State Dept. of Public Instruction, Madison. Div. of Instructional Services.

PUB DATE [78]

NOTE 457p.; Diagrams will not reproduce well due to light, broken print. For related documents see CE 027 177-178.

EDRS PRICE MF01/PC19 Plus Postage.

DESCRIPTORS Business; Business Education; *Course Content; *Curriculum Development; Curriculum Guides; Educational Improvement; Elementary Secondary Education; Films; *Industrial Education; Industry; Instructional Improvement; Instructional Materials; Learning Activities; *State Curriculum Guides

IDENTIFIERS *Private Enterprise; Wisconsin Guide Local Curriculum Indus

ABSTRACT

This handbook is designed to aid industrial educators in developing a private enterprise component in their programs in order to help students learn how business and industry work. It is a guide to implementing The Wisconsin Guide to Local Curriculum Improvement in Industrial Education, K-12. The book contains the following three sections: (1) content outlines which may be used to design a course on industrial enterprise; (2) learning activities keyed to the learning objectives of the Wisconsin Guide, in areas such as safety, product design and development, advertising and marketing, packaging, law, communications, management, finance, production, energy, property, materials, processes, procurement, and getting a job; and (3) resources--references, films, transparencies, instructional materials, games. The resources section also contains a list of projects for students, along with directions for making the products and conducting the production, business, and marketing activities needed. (KC)

****
* Reproductions supplied by EDRS are the best that can be made *
* from the original document. *
****

ED195698

U S DEPARTMENT OF HEALTH, EDUCATION & WELFARE
NATIONAL INSTITUTE OF EDUCATION

THIS DOCUMENT HAS BEEN REPRODUCED EXACTLY AS RECEIVED FROM THE PERSON OR ORGANIZATION ORIGINATING IT POINTS OF VIEW OR OPINIONS STATED DO NOT NECESSARILY REPRESENT OFFICIAL NATIONAL INSTITUTE OF EDUCATION POSITION OR POLICY

"PERMISSION TO REPRODUCE THIS MATERIAL HAS BEEN GRANTED BY

L. Harmatuck

TO THE EDUCATIONAL RESOURCES INFORMATION CENTER (ERIC)."

THIS PROJECT WAS SUPPORTED BY FUNDS
APPROPRIATED UNDER THE
EDUCATIONAL AMENDMENTS OF 1976 - TITLE II
PUBLIC LAW 94-482
PROJECT #9-5516/L084

BUREAU FOR VOCATIONAL AND CAREER EDUCATION
RUEL F. FALK, DIRECTOR

DIVISION FOR INSTRUCTIONAL SERVICES
CATHERINE STEHLY, ED.D, ASSISTANT SUPERINTENDENT

WISCONSIN DEPARTMENT OF PUBLIC INSTRUCTION
BARBARA THOMPSON, PH.D., STATE SUPERINTENDENT

DEC 4 1980

TABLE OF CONTENTS

Preface 1

Rationale
Why American Industry? 3

Content Outlines
Recommended Outline 10
Student Directed Enterprise 35
Recommendations 36
Model of Manufacturing Enterprise 40
Sequential Outline of Activities for a Course in Industrial Production 47
Key 55
Level I - American Industry Course Outline 63
Content Outline 65

Learning Activities
Activity #1 74
Activity #2 75
Activity #3 76
Activity #4 82
Activity #5 87
Activity #6 91
Activity #7 93
Activity #8 100
Activity #9 104
Activity #10 115
Activity #11 121
Activity #12 124
Activity #13 127
Activity #14 128
Activity #15 129
Activity #16 130
Activity #17 131
Activity #18 133
Activity #19 135
Activity #20 136
Activity #21 137
Activity #22 142
Activity #23 143
Activity #24 144
Activity #25 145
Activity #26 146
Activity #27 147
Activity #28 148
Activity #29 149
Activity #30 150
Activity #31 153
Activity #32 154
Activity #33 155
Activity #34 157
Activity #35 158
Activity #36 159
Activity #37 160
Activity #38 162

Learning Activities (cont.)

Activity #39 164
Activity #40 171
Activity #41 172
Activity #42 173
Activity #43 174
Activity #44 176
Activity #45 179
Activity #46 180
Activity #47 182
Activity #48 184
Activity #49 186
Activity #50 189
Activity #51 191
Activity #52 201
Activity #53 205
Activity #54 206
Activity #55 207
Activity #56 208
Activity #57 209
Activity #58 210
Activity #59 212
Activity #60 213
Activity #61 215
Activity #62 217
Activity #63 218
Activity #64 219
Activity #65 220
Activity #66 221
Activity #67 222
Activity #68 223
Activity #69 225
Activity #70 226
Activity #71 228
Activity #72 229

Letter from Wilson Junior High School 230
Production Finance Sheet 231
Letter from Westfield High School 232
Stockholders Record 235
Marketing Sales Record 236
Master Budget 237
Break-Even Chart 238
Profit and Loss Statement 239
Balance Sheet 240
Capitalization Report 241
Materials Record 242
Change Order 243
Route Sheet 244
Work Order 245
Jig and/or Fixture Design 246
Work Station Design 247
Left-Hand/Right-Hand Chart 248
Time Study Sheet 249
Quality Control Design Sheet 250
Quality Control Work Order 251

Learning Activities (cont.)
Inspection Tags 252
Purchase Requisition 253
Purchase Order 254
Materials Receiving Report 255
Financial Journal 256
Sales Order Form 257

Resources
References 259
Industrial Education Instructional Materials Center 264
Transparencies for Industrial Enterprise 267
Resource Persons 268
Films for Industrial Enterprise - Free Loan 269
Addresses for Films 272
U.S. Bureau of Mines--Motion Picture Refusal Notice 273
Games and Simulations in Industrial Arts Education 275
Project Selection Ideas 282
Line Production Activity #14 - Pen Set 284
- Corn Skewer Holder 295
Line Production Activity #13 - Corn Skewer 305
Line Production Activity #12 - Candy Box 313
Line Production Activity #11 - Cigarette Box 328
Line Production Activity #10 - Letter Tray 340
Line Production Activity #9 - Coaster 348
Line Production Activity #8 - Salt and Pepper Shaker 354
Line Production Activity #7 - Peg Puzzle 363
Line Production Activity #6 - Spinner 369
Line Production Activity #5 - Pennant 374
Line Production Activity #4 - Cheese Board 382
Line Production Activity #3 - Wrought Iron Dinner Bell 394
Line Production Activity #2 - The Square Puzzle 399
Line Production Activity #1 - The "T" Puzzle 404

Other Project Ideas 410

PREFACE

This handbook is intended to aid industrial educators in developing industrial enterprise activities into their programs. The Industrial Enterprise Handbook is not a course of study, but rather a resource to aid in local program improvement. It is designed to be used by educators to aid them in implementing The Wisconsin Guide to Local Curriculum Improvement in Industrial Education, K-12.

The content outlines, models, structures and activities can be utilized for courses, specific units or for integrating industrial enterprise concepts throughout the industrial education program.

The materials included in this handbook come from a number of excellent resources that have been developed to improve industrial enterprise education. Where the sources were known, credit is given for inclusion.

Mr. Robert Hendricks
Wild Rose High School
600 Park Avenue
Wild Rose, WI 54984

Mr. Terry J. Squier
Oak Creek High School
340 E. Puetz Road
Oak Creek, WI 53154

Mr. Michael A. Hopfensperger
Wilson Junior High
225 North Badger Ave.
Appleton, WI 54911

Dr. Douglas Stallsmith (Consultant and Editor)
Business & Ind. Management
University of Wisconsin-Stout
Menomonie, WI 54751

RATIONALE:

A rationale is a reason for existence of prepared action. In curriculum development it answers the key question of "why" something is taught.

A rationale is thus a justification statement which highlights the importance of the program, course, or unit which it is directed at.

The statement is generally short, concise, and directly to the point. The rationale that follows in this resource handbook provides the use with a set of ideas to use in developing a statement for local use.

WHY AMERICAN INDUSTRY?

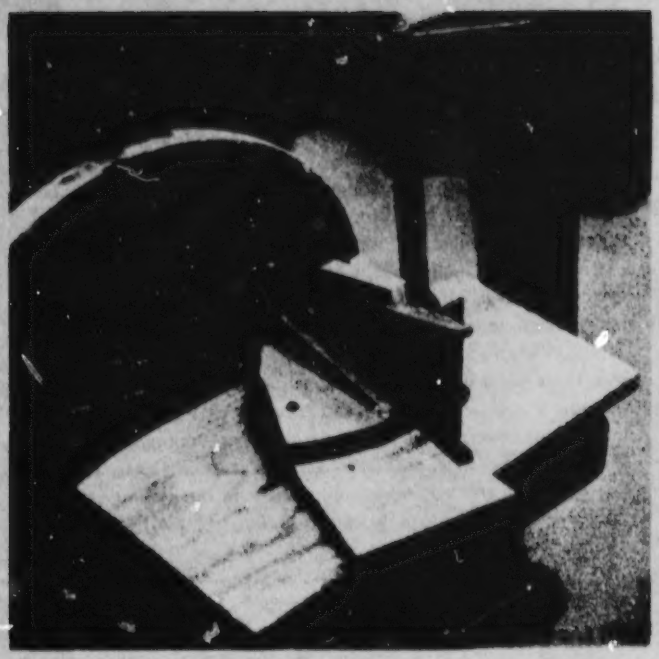

Special fixture developed for sanding part of a product.

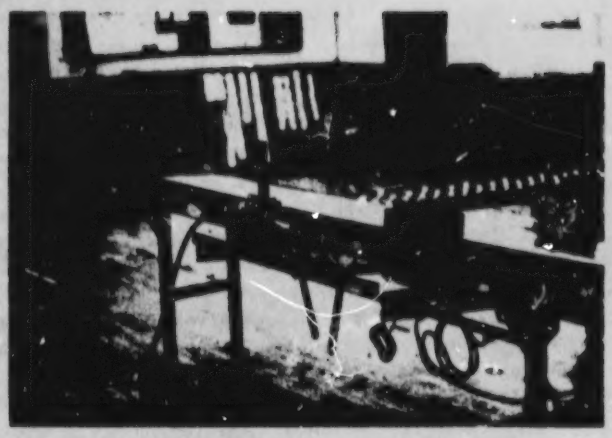

Conveyors are an important means of transportation in industry.

Why American Industry?

This article was edited by Dr. Herbert A. Anderson, dean of the School of Applied Science and Technology, Stout State University, Menomonie, Wisconsin, and by Harry Olstad, director of the American Industry Project, with contributions from the staff of the School of Applied Science and Technology.

Trying to determine what industrial arts has been would be an interesting challenge for a historian. Trying to determine what industrial arts is today would be an exciting venture for a researcher. This is not to suggest that either is unimportant, but if we are to be concerned about the direction industrial arts should take to meet the needs of the youth of tomorrow's world, we must constantly consider what industrial arts should become.

The American Industry Project at Stout State University has developed a direction for industrial arts. The program which has resulted should be considered as a possible alternative to prepare people better to live in tomorrow's world.

To understand the basic rationale underlying the American Industry Project, several basic questions must be asked. These same questions should be asked of any proposal for industrial arts. First, *what is the purpose of the school?* This may seem elementary, but there is a wide range of opinions as to the various objectives of the school. Many of these views have led the schools to assume responsibilities which formerly were considered the domain of other institutions in our society, such as the church or the family.

In recent years, there has been a growing concern that the real mission of the school has become obscured. The American Industry Project subscribes to two basic objectives. First, the schools must develop the rational powers of all men—the ability to do critical and objective thinking in the resolution of problems. Second, education is an acculturation process in which the student is aided in developing an understanding of his culture. We cannot expect citizens to interact intelligently with their environment and fellow men unless the schools aid in developing the necessary competence. We are preparing our young people to live in the future. If one accepts these two major objectives, then one must ask: "What will the future culture be like? What are its various facets?"

This leads very naturally to the second question: *What facet of our environment should industrial arts help interpret for young people?* For many years we have seen a growing gap between the various schools of thought in industrial arts as to which body of knowledge should be transmitted by this portion of the school curriculum. These two schools of thought can be broadly categorized into those who feel that industrial arts should develop an understanding of technology, and those who feel that industrial arts should focus upon an understanding of industry.

Proponents of the position that industrial arts should focus upon the study of technology claim that there is a body of knowledge associated with technology, and not with industry. After the many years of research which have been devoted to the study of American industry by the American Industry Project, project workers have concluded that this is untrue. There *is* a unique body of knowledge which is utilized within industry.

It has been stated that if you want people to understand religion, have them study theology, and not the church. This is not appropriate. If one were to study theology in an attempt

to help young people understand the religious aspects of their lives, one should also regard as appropriate a study of the church as an institution. No amount of theological study can answer the questions of why we find prejudice in churches, or why we see any number of other activities carried on within the church. If one wishes to help young people understand the religious aspects of their environment, encourage them to study the church. A study of the church would include a study of theology and also of how the church interacts with the other institutions in our society. This study would be incomplete if it did not also show how the church adapts to the various mores and values subscribed to by the society in which it finds itself. This analogy is more appropriate when we consider trying to make a distinction between whether we should study technology or industry.

If one decides that a study of industry should be the central focus, then an analysis of industry will quickly lead one to conclude that there is a technology of industry which would be included in such a study. We are not, however, limited only to a study of technology. The analysis will show also that one must study industry in relationship to other institutions in our society. It will also indicate that other facets of industry, which would be included in the study, would be difficult to justify in a study of technology, such as various economic principles which are vital to a study of industry in our capitalistic society.

Those in industrial arts who feel that technology is the more appropriate body of knowledge have not analyzed all of the knowledge associated with technology. They have not structured the understanding necessary to understand *technology*. They have, rather, categorized different types of technology. This is not an unnecessary step or an unimportant activity. It is, in fact, one of the first steps necessary in the development of a body of knowledge. What has been developed is a vertical approach to the study of technology.

An analogous situation would be medicine. Our first major attempt to understand human functions better was to study them in isolation. Many medical researchers, however, claim that greater advances come when we study these systems *in toto* and see how they affect one another. If one closely examines the technology proposed for the field of industrial arts, it becomes apparent that those who suggest technology as the major focus are really concerned only with industrial technology, or those processes utilized in the production of goods and services.

It is the position of the American Industry Project that the body of knowledge which should be utilized as the basis for the content of industrial arts is industry and not technology. We live in a man-made society. We are constantly surrounded by the products of industry, and influenced by the impact of industry. It is a major portion of everyone's environment. The average room contains over 600 major products of industry, coming from almost every state, and from many foreign countries.

But how much does the average person really know about the operation of this institution? If he has had a course in industrial arts, he has probably developed some elementary understanding of a few of the many thousands of operations required in producing a complex product. Yet how much does he really understand of how all these operations are coordinated and controlled during mass production? If he has had a course in economics, he may have some low-level understanding of how industry is financed, but how much does he understand about how profits are determined, materials purchased and salaries calculated? If he has had a course in physics, he may be aware of the different types of energy, but is he aware of how these forms of energy are harnessed during the production of goods and services? If he is one of a rather small group of students enrolled in a distributive education course, he may have some understanding of sales, but is he aware of market analysis, the effects of advertising, and the various forms of services that must accompany the marketing of a product?

This analysis could continue, but perhaps it makes the point that there is no single subject in the schools which attempts to develop an understanding of industry. Industrial arts can and must accept this challenge if we are to help young people live in our society. The problems of the future are inseparably linked with increased industrialization, and our young people must be led to an adequate understanding of how these forces impinge upon our daily lives.

If this is an acceptable position, then the next question becomes: *How do you define industry?* This may seem elementary, but it has proved to be a very difficult task. The definition of industry utilized by the American Industry Project has evolved over several years of analysis. The definition now being utilized is as follows:

> American Industry is an institution of our society, which, intending to make a monetary profit, applies knowledge and utilizes natural and human resources to produce goods or services to meet needs of man.

Broader definitions were first considered, but they did not exclude other institutions in our society, nor did they indicate the significance of monetary gain. This definition has been reviewed and approved by numerous industrialists throughout the country.

Many have asked why *American* industry? This delimitation is necessary, because the bulk of our young people will live in the American culture. This is not to say that a study of American industry precludes developing an understanding of industry in other cultures. Certainly, to understand better the differences between industry in America and in other countries, it is necessary to develop some understanding of how industry operates in other societies. This is an integral part of the study and is necessary if the study is to be complete.

Others have suggested that the goals are acceptable, but that the undertaking is overly ambitious with an institution of this magnitude. Such a study requires that the knowledge be appropriately organized or structured.

The idea of structure is not a difficult concept. Everything can be organized and structured. Man becomes frustrated and confused when he cannot find organization, and where he cannot easily identify the structure, he will superimpose one upon it. It is, therefore, extremely important that in our schools the knowledge we transmit be as carefully organized and structured as possible. We can no longer tolerate the transmission of facts which are arranged in no coherent fashion, have seemingly little relationship to each other, or hold no relevance to life as the student practices it. Structure simply means the parts of a whole, and how these parts are interrelated.

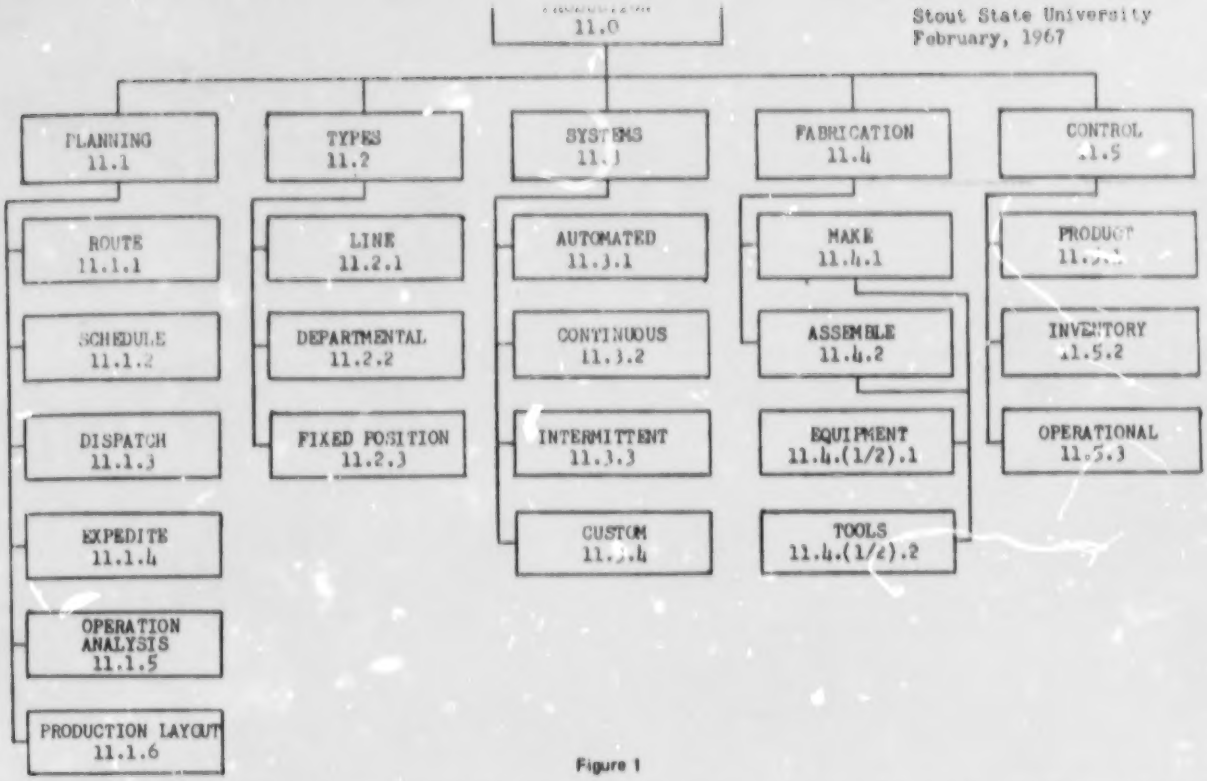

Figure 1

For example, in the study of humans, one might structure our understanding according to the physical, psychological or sociological aspects of man. We might structure the physical aspects of man according to the various portions of the body, such as the limbs, the trunk and the head. Or we might wish to categorize the understanding of the human body according to the various systems, such as the respiratory system, the nervous system and the circulatory system. Everything in our environment can be structured.

Knowledge can also be structured and arranged in meaningful and logical categories. Most scholars would agree that if you can legitimately call a subject a discipline, then it must have a logical structure. The various components fit together according to some scheme of coordination, and they cohere in some kind of systematic fashion. A body of knowledge is not merely a collection of various and sundry ideas. It has a characteristic logic that provides a standard for judging whether a given idea or fact belongs to the discipline or not, and, if it does, how it fits with the other components of the body of knowledge.

Ideas and understanding that we have may be arranged in a hierarchical order. (Note Figure 1) At the top of the hierarchy, we have those ideas which tend to characterize the discipline, those which tend to show the major parts of a system. At the next level of the hierarchy are corollary ideas—those ideas which grow very naturally from the primary ones. In the next-lower level appear important concepts that serve as organizing principles for the larger sub-divisions of the discipline. The next level contains those ideas that prove useful in detailing the various special problems and areas of the body of knowledge. If this analysis were to continue, we would find ultimately, at the bottom of the hierarchy, a host of individual facts and pieces of information we know about the body of knowledge.

Why is it important for the student to have an understanding of the structure of a subject? What does this mean to the quality of learning?

The literature on the structuring of knowledge seems to indicate four major advantages in studying the structure of a body of knowledge. First, the understanding of the structure of a subject provides simplicity and makes details more meaningful and easily remembered.

This is particularly important in today's society. A hundred years ago a well-educated man could aspire to know something about the major ideas and related facts in most fields of knowledge. This is not possible in today's society with the explosion of knowledge. This is perhaps not an apt term, since explosion would suggest an uncontrolled, erratic expansion. This does not appear to be the case. It would seem more appropriate to say there has been an exuberant, healthy growth in what man knows about his environment. Nevertheless, we know that there is much more knowledge today with which man must be concerned than there was in the past. The school cannot transmit this knowledge unless it is structured in some meaningful fashion.

Second, the study of the structure reveals relationships which provide a unity of knowledge. It has been stated that when you study the structure of a subject, it allows you to see how knowledge is related meaningfully to it, thus helping the learner recognize the relationships that exist within a body of knowledge. The learner may also be guided to see the similarities between it and other subjects which are present in the curriculum. Good teaching which emphasizes the structure of the body of knowledge is probably more important for the less able student than for the gifted one, for it is the former rather than the latter who is most easily thrown off the track by poor teaching.

Third, the study of structure enables individuals to organize

learning for transfer. The complexities of our society demand that man acquire the type of education that will enable him to apply that which he has learned to whatever he may encounter. We cannot expect our schools to transmit all of the knowledge that man will need as he interacts in his environment with his fellow man. It is the hope of the school that he will be able to transfer understanding in one subject to the solution of problems in another aspect of life.

Fourth, the study of structure enables the student to experience discovery. If the student understands the structure of many bodies of knowledge, he can uncover and find new knowledge because he has a meaningful mold or model into which he can categorize new bits and pieces of information. Structuring a body of knowledge is not a simple affair. It requires a great deal of analysis and a rather thorough understanding of the facet of life with which one is concerned.

In structuring the knowledge of industry, the central question is, "What are the big ideas?" These have been called representative ideas in that they cause the area to have some forms, some patterns, some structure. These questions were asked of industrialists throughout the United States. *What are the big ideas? What must you know in order for your industry to be successful?*

After several years of study, the American Industry Project has developed a logical organization of the knowledge of industry. Thus, the next most basic question that should be asked is, *What is a structure of the knowledge of industry?* Figure 2 shows the structure which is presently being utilized to categorize the knowledge of industry. It has evolved from a study of industry, and continuous study will be necessary to see that the structure is kept up-to-date. As society changes, and as the institution itself changes, then the structure or the model must also change.

As may be noted in the structure, there are thirteen major areas which must be considered in understanding industry. These areas must not only be studied in isolation. They must also be studied to determine how they inter-react with one another. The structure also points out the need to study how industry is affected by the environment in which it operates. Five considerations are listed as major facets of the American environment, all of which have an influence on how industry operates. Our particular form of government, for example, will have a great influence upon industry. Our views on the public interest, competition and private property will greatly influence the way in which industry conducts its activities. The resources that are available in our particular culture will also either limit or expand the possibilities which are available to industry. Thus, as indicated earlier, American industry should not and cannot be studied in isolation if it is to be completely understood.

It should be made very clear that the process has been one of trying to categorize all of the different knowledge which is necessary to the operation of any industry. It is not an attempt to categorize different forms of industry. The area of communication does not require a study of the communication industry, but rather of what is necessary for effective communication to take place in industry. This is true of each of the major areas shown on the structure. It is the position of the American Industry Project that every industry in the United States, regardless of product or service, must give consideration to this knowledge if it is to achieve its goals

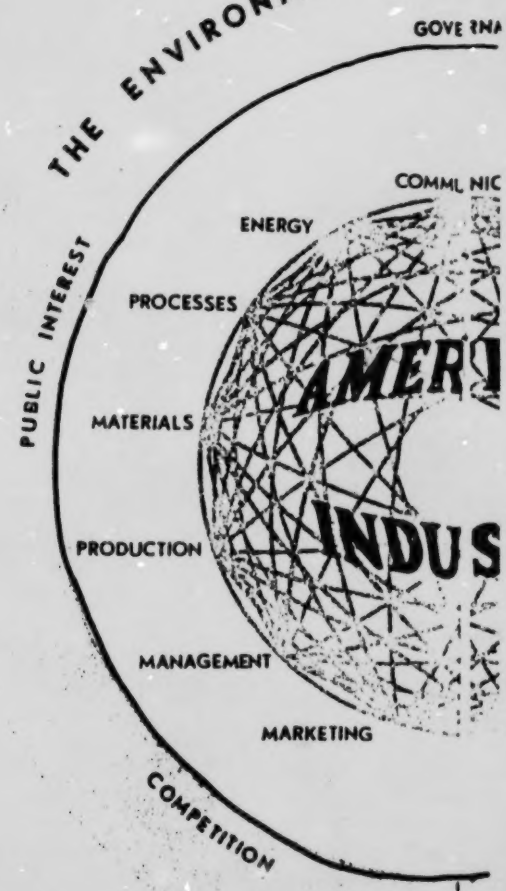

A CONCEPTUAL STRUCTURE OF THE KNOWLEDGES NECESSARY TO UNDERSTAND AMERICAN INDUSTRY

effectively.

After the major ideas have been identified, it then becomes necessary to ask, "What are the other ideas and knowledge represented within each of these categories?" As one looks at the thousands, if not millions, of known bits of information about industry, one could quickly envision the monumental task of trying to transmit these thousands of specifics. For example, if one looks carefully at the way in which we fasten materials together, one can easily identify over 600 known methods. It is obvious that the schools could not possibly develop an understanding of each of these specific methods. Analysis of those 600 specific methods determined that they could be sub-categorized. In the case of fastening materials, one can categorize them by method—cohesion, adhesion, and mechanical linkage. Thus the task of studying these particular concepts has been greatly simplified. These major concepts subsume the 600 specific methods which have been identified. Each of the major areas represented on the structure has been broken down, as previously suggested, into a conceptual model.

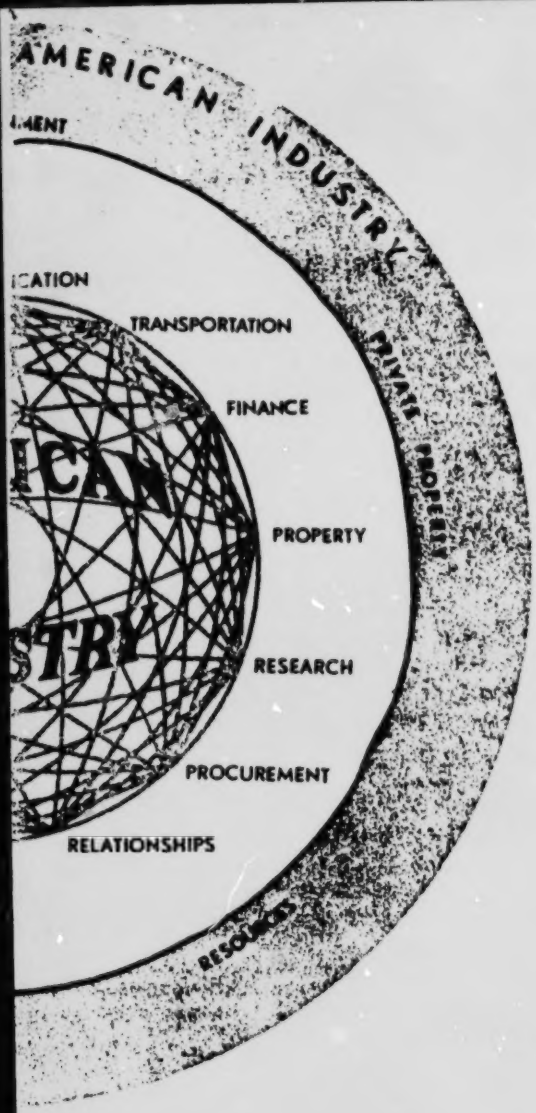

Figure 2

This leads naturally to another major question: "What is meant by the term concept'?" The American Industry Project has defined a concept in the following manner:

> A concept is a psychological construct resulting from a variety of experiences detached from the many situations giving rise to it and fixed by a word or symbol having functional value to the individual in his thinking and his behavior.

Several facets of this definition require explanation. First of all, it is apparent that a concept is not concrete. It is theoretical, something in the mind that has resulted from a variety of experiences, not a single experience. A concept results from the individual's having experienced many common facets of the environment. These commonalities are fixed by a word or symbol. The word or the symbol is not the concept, but the word or symbol brings to mind a series of characteristics to help one better understand that which he has experienced. Having conceptual understanding helps one in the way he thinks and the way he reacts to his environment and his fellow man.

The American Industry Project has given a great deal of time and attention to how conceptual understanding can be developed. One could well ask why. This requires some explanation of what the Project feels the role of a teacher to be. At least one commonly-accepted definition of a teacher is that he is a facilitator of learning. If a teacher is to facilitate the learning act, then obviously it is necessary to understand the process of learning. In arriving at a theory of how people learn, it is essential to look at how man interacts with his environment. Man is constantly being influenced by the various facets of his environment. As he interacts with these facets of his environment, certain consequences occur. As man becomes aware of these consequences, it leads him to other reactions. Seeing or becoming aware of the consequences of these actions is the learning process.

The American Industry Project basically accepts the works of Dr. Asahel Woodruff. We have accepted his views on learning as the basis for many of our instructional materials. The basic learning cycle proposed by Dr. Woodruff consists first of sensory input which leads to the process of concept formation. After man has developed these concepts, they will affect his behavior. He is then placed in the position of having to make decisions utilizing these concepts. As he utilizes these concepts in his interaction with the environment, he sees the consequences of his interaction. His perception of the consequences is determined again by the senses, and thus serves as new input into the refinement and further development of his conceptions and understanding of the world. This is a cyclical process, on-going from birth until death. No learning can take place until this cycle is complete.

If this is an acceptable theory, then one can be very critical of many of the activities of the schools. The first stage of the learning cycle, that of sensory input, has been rather well-developed. We surround the students with many opportunities to sense various pieces of information, facts and knowledge. The process, however, of formulating these bits and pieces into meaningful concepts has been rather poorly handled in the past. A great deal of effort has been expended in many of the curriculum projects to aid the learner in the concept formation stage. The third stage, however, of having an opportunity to apply these concepts to his environment, is rather poorly implemented by many of the subject areas. If the learning cycle is to be complete, the student must have the opportunity to apply these concepts to meaningful, relevant situations to determine their adequacy. He must be allowed to see the consequences of using these concepts and how they affect his environment. Consequences of these reactions then must be fed back to the senses for further refinement and development of the student's conceptual knowledge. This learning cycle, in most cases, is not complete, and thus little or no learning occurs.

Acceptance of this or any learning theory must become the basis for the instructional systems that are developed. The materials which have been developed by the American Industry Project have attempted to give the student the opportunity to develop conceptual understanding, to apply this to realistic situations, and to see, in meaningful ways, the consequences of his actions.

These are the major tenets of the rationale in the American Industry Project.

CONTENT OUTLINES:

Content in any curriculum area can be structured in many different ways. In addition, the manner in which the content overview is communicated to other professionals can take on a variety of approaches.

Common approaches for communicating a curriculum structure, scope, and sequence are usually in the form of outlines, models, or a combination of the two.

The content structures that follow in this handbook are examples of different ways of communicating the subject to the profession.

RECOMMENDED OUTLINE

Unit I Introduction

A. Introduction to Class
B. Why Studying the Enterprise is Important
C. General Discipline
D. Shop Safety
E. Grading

Unit II Environment of Industry

A. Basic Economic Understanding
B. Interdependence of Industries
C. Interrelationship of Society and Industry
D. Environment in Which Industry Operates
E. Comparison of Economic Systems, i.e., Socialism, Communism

Unit III What is Industry?

A. Industry and Enterprise
B. Goods and Service Producing
C. Elements of Industry

Unit IV Development of Industry

A. History of Industrial Development

1. 100 B.C. - 900 AD Primitive
2. 1000 - 1399 Middle Ages
3. 1400 - 1699 Renaissance
4. 1700 - 1899 Industrial Revolution
5. 1900 - 2000 Atomic and Space Age

B. Basic Needs of People

1. Food
2. Clothing
3. Shelter

C. Inventions

1. Eli Whitney, Robert Fulton, Samuel Morse, Henry Ford, Oliver Evans, John Winthrop, Cyrus McCormick, Fredrick Taylor

Unit V Teacher Directed Enterprise

The intent of the teacher directed enteprise is to provide a broad based experience in the enterprise. This experience will provide the base from which the student can draw knowledge for the student d rected enterprise.

Example: Students need to operate simple jigs and fixtures before they get involved in designing and constructing jigs and fixtures.

A. Job Applications and Job Interviewing
B. Safety Procedures
C. Trial (Pilot) Run
D. Review (Debug) Trial Run
E. Production Run
F. Sales and Distribution
G. Relating Concepts to Production

Unit VI Communications

A. Communication Model

B. Sketching
   1. Orthographic
   2. Isometric

C. Blueprint Reading
D. Measurement

Unit VII Materials and Processes

A. Define Terms

B. Classification of Materials
   1. Natural
   2. Synthetic

C. Selection of Materials
   1. Need
   2. Source
   3. Quality
   4. Quantity
   5. Price

D. Processes
   1. Primary Processes
      a. Growing
      b. Extracting
   2. Secondary Processes
      a. Separating
      b. Forming and/or Conditioning
      c. Combining
      d. Finishing

Unit VIII Research and Development

A. Research Types
   1. Pure
   2. Applied

B. Problem Solving Method
   1. Define Problem
   2. Gather Information
   3. Form Hypothesis
   4. Test Hypothesis
   5. Select and Evaluate Solution

C. Careers in R&R

Unit IX Marketing

A. Types of Marketing
   1. Industrial
   2. Retail

B. Market Research
   1. Developing the Market Survey
   2. Administering Survey
   3. Tabulating Survey Results

C. Advertising
   1. Name Calling
   2. Glittering Generalities
   3. Plain Folk
   4. Testimonial
   5. Card Stacking
   6. Bandwagon
   7. Comparison

D. Sales
   1. Sales Promotion Techniques
      a. Introduction
      b. Contests
      c. Discounts
      d. Premiums
      e. Exhibits
      f. Brand Name

E. Distribution
   1. Packaging
   2. Delivery

Unit X Management

A. Define Terms

B. Ownership Forms
   1. Single Proprietorship
   2. Partnership
   3. Corporation

C. Management Responsibilities
   1. Responsibility to Owners/Stockholders
   2. Responsibility to Employees
   3. Responsibility to Customers
   4. Responsibility to Public

D. Qualities of a Good Manager
   1. Delegate Authority
   2. Plan Effectively
   3. Collect Information
   4. Consult Others
   5. Evaluate Performance

E. Management Organizational Structures
   1. Line
   2. Staff
   3. Line and Staff

Unit XI Finance

A. Define Terms

B. Determining Financial Needs
   1. Money to Form Business
   2. Money for Equipment and Facilities
   3. Money to Operate

C. Acquiring Capital
   1. Owners' Equity
   2. Debt Financing
   3. Revenue

D. Controlling Money
   1. Budgeting
   2. Accounting
   3. Purchasing Procedures
   4. Profit and Loss Statement
   5. Break-even

E. Related Finances
   1. Gross National Product
   2. Stock Market
   3. Government Controls

Unit XII Production

A. Define Terms

B. Types of Production
   1. Custom
   2. Intermittent
   3. Continuous
   4. Automated

C. Production Control
   1. Planning
   2. Routing
   3. Scheduling
   4. Dispatching
   5. Expediting
   6. Bill of Materials
   7. Route Sheet
   8. Flow Process Chart

D. Tooling up for Production
   1. Jigs
   2. Fixtures
   3. Specialized Equipment
   4. Inspection Gauges and Instruments

E. Quality Control
   1. Defective and Rejection Records
   2. Customer Complaints
   3. Built-in Quality
   4. Inspection Training
   5. Employee Attitude

F. Materials Handling
   1. Raw Material Handling
   2. In-process Product Handling
   3. Finished Product Handling

Unit XIII Maintenance and Services

A. Define Service Sector
   1. Comparison with Goods Producing Enterprise

B. Categories of Service Industries
   1. Amusement
   2. Repair
   3. Personal
   4. Transportation
   5. Communication
   6. Lodging
   7. Real Estate
   8. Banking
   9. Insurance
   10. Accounting

C. Preventive Maintenance
   1. Diagnosing
   2. Replacing
   3. Repairing
   4. Adjusting

D. Warranties and Guarantees

Unit XIV Manpower

A. Manpower Needs
   1. Unskilled
   2. Semi-skilled
   3. Skilled
   4. Highly Skilled

B. Training Programs
   1. On-the-Job Training
   2. Vestibule Training
   3. Apprenticeship Training
   4. Classroom Training
   5. Cooperative Training
   6. Management Training

C. Union Relations
   1. Union Organization
   2. Contract Negotiations
   3. Grievance Procedures

Unit XV Power and Energy in Industry

A. Need for Energy
B. Sources of Energy
C. Use of Energy
D. Conservation of Energy

Unit XVI Property

A. Define Terms

B. Classification of Property
   1. Permanent
   2. Temporary

C. Planning Property
   1. Purpose
   2. Types
   3. Quantity

D. Maintenance
   1. Preventative
   2. Corrective

Unit XVII Student Directed Enterprise

A. Introduction to Student Enterprise
B. Selecting and Developing Product or Service
C. Organizing and Financing the Enterprise
D. Developing the Production System
E. Providing Manpower
F. Producing the Product or Service
G. Marketing the Product or Service
H. Liquidation

OUTLINE	ACTIVITY	REFERENCE	AUDIO VISUALS
I. Introduction to Study of Industry A. Introduction to Class			
B. Why Study the Enterprise	Discussion of how industry affects their everyday life. Examples of what they own that is not made by industry	Ref. 24 p. 21-23 Wisconsin Guide Support Material <u>The Enterprise</u> p. 2-39	film #2 1 25
C. Discipline	A1-Relate school shop discipline to job attitude Obtain a copy of a local companies rules and regulations. Assign a few rules to groups of 5; each group should report to class why rule was made and what would be the result if the rule was not followed.	Ref. 26	Filmstrips accompany reference #20
D. Safety	See safety pledge in Learning Activities A2		film #23 6 43
E. Grading	It is suggested that the grading system should reflect industry, pay, promotion, incentive, merit pay. Remember the intent is to stimulate industry.		

* Peer input, (+, ok, -) effort, punctuality,etc, are suggested as alternatives to a strict A, B, C, D, F system

The intent of placing this unit at the beginning of the course is to set the stage for the remainder of the year. Productivity, profit, quality, salability, government control, societal pressure, basic economic concepts, etc. are all a critical portion of this unit.

OUTLINE	ACTIVITY	REFERENCE	AUDIO VISUALS
II. Environment of Industry			
A. Basic Economic Understanding	Game #11 The Economic System	Ref. 22 chapter 1, Business in U.S. Ref. 20 reading #3 Manufacture and Economic System Ref. 30	#21 The Nations Business
B. Interdependence of Industries	Bring in any product with several parts; disassemble it and discuss how many industries were involved in component manufacture. Discuss supplies, pricing, quality, etc. of each component part. Simulation #39 Import		
C. Inter-relationship of society and industry	Communications between industry and society	Ref. 22 chapter 1 Ref. 32 item 74-11	
D. Environments in which industry operates	Simulation #12	Ref. 27 American Industry Guide - Environment of Industry	
E. Comparison of Economic System i.e. Socialism, Communism	Lecture discussion-the advantages and disadvantages of a free enterprise system		American Industrial Transparencies film #21 #35 #66

OUTLINE	ACTIVITY	REFERENCE	AUDIO VISUALS
III. What Is Industry?			
A. Industry and the Enterprise		#29 #18	The enterprise 75-27 filmstrip - Stout Resource Center, Teacher Ed Dept.
B. Goods and Service Producing Industries	Look up the goods and service producing sectors from the Occupational Outlook Handbook Have all class members list father's and mother's occupation and classify each as a goods producing or service producing. A3	#28	Film #30
C. Elements of Industry	Discuss the elements of industry and discuss each	American Industry #27	Ref. 32 item 75-37 Transparencies

OUTLINE	ACTIVITY	REFERENCE	AUDIO VISUALS
IV. Development of Industry			
A. History of Industry 1. 100 B.C.-900 A.D. Primative 2. 1000-1399 Middle ages 3. 1400-1699 Renaissance 4. 1700-1899 Industrial Revolution 5. 1900-2000 Atomic and Space age	Ref. 32 History of Industry Read package and complete self test See reference #30 for any activity addition	Ref. 32 item 74-4 Ref. 30	Film: The Tools That Shaped America #13
B. Basic needs of Man. Why industry advanced-food clothing-shelter		27 American Industry Instructors Guide	
C. Inventors Eli Whitney Robert Fulton Samuel Morse Henry Ford Oliver Evans John Winthrop Cyrus McCormick Fredrick Taylor	Assign an inventor to each class member. Have him/her list invention date and reasons for invention, significance of invention toward development of industry.		#66 Innovation #31152

The intent of the teacher directed enterprises is to provide a broad based experience in the enterprise. This experience will provide the basis from which the student can draw knowledge for the student directed enterprise.

(see sample forms for operating an enterprise)

OUTLINE	ACTIVITY	REFERENCE	AUDIO VISUALS
V. Teacher Directed Enterprise			
A. Job Application	See ref. 27 for a sample job application. Obtain a copy of a job application from a local company. Have a personnel manager interview a few students from the class. Or see page 53, ref.#19 Have students cut out want ads of jobs that they would like. A7	#19 p. 31-74	
B. Machine Safety Procedures	The teacher can include a safety test with the job application if the student applies for a specific job. A1	Hobart Publication #32, #74-14	
C. Trial (pilot) Run	The students should run a few products through the entire production line.	Ref. 27 24	Film #5 4
D. Debug	The production sequence should be analyzed (apply the scientific method of problem solving) Problems should be identified and corrected		
E. Production Run		21,22,24	
F. Distribute the Products			

V. continued

OUTLINE	ACTIVITY	REFERENCE	AUDIO VISUALS
G. Relate the concepts to production	A3 The teacher should assign a concept to 2 students. They will prepare to give a report of how the concept was utilized in the production.		

OUTLINE	ACTIVITY	REFERENCE	AUDIO VISUALS
VI. Communications A. Communication Model	Simulation #15 American Industry Instructors Manuel A13 A14 A15 A16 A17 A18 A19 A20	ref. #32 item 74-10 ref. #32 item 74-12 ref. #33	filmstrip Ref #32 75-34 film #20 film #28
B. Sketching 1. Orthographic 2. Isometric			
C. Blueprint Reading			
D. Measurement Ruler Micrometer Metric			

OUTLINE	ACTIVITY	REFERENCE	AUDIO VISUALS
VII. Materials and Processes			
A. Define			
B. Classification of material	Ref. 32 item 74-7	Ref. 20	Film # 7
			#10
	Ref. 32 item 75-19	Ref. 24	#15
1. Natural			#32
	A62, 63, 64	Ref. 25	#50
2. Synthetic			
	See Broadhead/Garrett Materials Tester		
	See Materials and Processes Implementation Handbook		
C. Selection of Materials	A67, 68, 69, 70, 71		
1. Need			
2. Source			
3. Quality			
4. Quantity			
5. Price			

VII continued

OUTLINE	ACTIVITY	REFERENCE	AUDIO VISUALS
D. Processes			
1. Primary Processes			
a. growing			
b. extracting			
2. Secondary Processes	Ref. 32 item 78-1 78-2 78-9	Ref. 25 Ref. 24	Film #16 Film #22
a. separating	78-39 78-41 78-45	Ref. 20	Film #31
b. forming and/or conditioning	78-47 78-49 78-50	Ref. 38	Film #46
c. combining	A65, 66		
d. finishing			

OUTLINE	ACTIVITY	REFERENCE	AUDIO VISUALS
VIII. Research and Development			
A. Research Types	Ref. 32 item 74-2 Introduction to research and development	Ref. 2 Ref. 15 Ref. 22 Ref. 24	Film #3 " 17 " 24 " 54
1. Pure			
	A(activity)4		
2. Applied			
B. Problem solving	Have students apply the research and development methods to a 3 day project. i.e. package an egg & drop off the roof of school to simulate shipping of electronic parts.		
1. Define Problem			
2. Gather Information	Design and develop a jig and fixture.		
3. Form Hypothesis	Have students construct balsa wood tower and test with weight		
4. Test Hypothesis	See R and D Handbook		
5. Select and Evaluate			

OUTLINE	ACTIVITY	REFERENCE	AUDIO VISUALS
IX. Marketing			
A. Industrial Marketing	Discuss differences	Ref. 24	
Retail Marketing	Ref. 32 item #74-5 Overview of marketing and distribution Simulation #3 " 12	Ref. 18	
	A5 A6	Ref. #5	
	Simulation #20		
B. Market Research	Show students samples of other surveys.	Ref. 18	
1. Construction of a survey	Have students construct survey for the product they developed.		
	A22		
	A56		
2. Administering survey and tabulating results	Have students administer survey to class, study halls, during lunch, etc. Students should then tabulate and analyze results Get local businesses marketing rep. to discuss recent market analysis. Market Survey forms from Ref.27		

IX continued

OUTLINE	ACTIVITY	REFERENCE	AUDIO VISUALS
3. Advertising	Activity 8 - after completing this activity, have students cut advertisements from magazines, newspapers, etc. and categorize by 7 advertising types. A23 A24 A25 A26 A27	1218	Film #49 Transparencies D.C.A. Intro to AI Stout A.I.
4. Sales	Have students analyze newspapers, magazine, television, radio etc. commercials and determine sales promotion technique being used. Establish sales promotion technique to be used for their product.		
5. Distribution			
A. Packaging	A9 A10 A11	Ref. 27	
B. Delivery	Invite guest speaker from local trucking firm or railroad department.		

OUTLINE	ACTIVITY	REFERENCE	AUDIO VISUALS
X. Management			
A. Define	A30	Ref.24	
B. Ownership forms	Ref. 27 booklet 1, Unit III, page 10	Ref. 27	
	A35	Ref. 8	
C. Management Responsibilities	Ref. 33 Item 75-18 Ref. 33 78-11		Film #42 film #44
	Activity 9 A12	Ref. 14 Ref. 24	
D. Qualities of a good Manager	Simulation #5 " 8 " 7 " 32 " 37		
E. Management Structure	Activity 29, 31, 32, 33, 34		

OUTLINE	ACTIVITY	REFERENCE	AUDIO VISUALS
XI. Finance			
A. Define	Ref. 32 item 74-8 A35	Ref. 4	D.C.A. Transparencies
B. Determining Financial Needs	Activities from ref. 4		
C. Acquiring Capitol	Simulation #2	Ref. 18	Film #36
	" 25	Ref. 22	" 40
	" 30		
D. Controlling Money	Bookkeeping Activities 36, 37, 38		
E. Related Finances	Discuss G.N.D. Government Controls Simulation #31 Activity 39		

OUTLINE	ACTIVITY	REFERENCE	AUDIO VISUALS
XII. Production			
A. Types of Production	Ref. 32 item 74-3 Simulations #11, 19, 22, 27, 28 Activities 49, 50	Ref. 24 workbook Ref. 21	Film # 1 Film # 8 D.C.A. Intro. to A.I. Transparencies American Industry Transparencies Film #14
B. Production Control	See section of this manual on production forms Activities 40, 41, 42, 43, 44, 45, 46, 51	Ref. 2 Ref. 10 Ref. 32 Ref. 34	Filmstrip Industry in 20th Century America -Ind. Engineering -Production Engineering -Plant Engineering -Manufacturing -Quality Control
C. Tooling up for Production	Ref. 32 item 75-23 Activity 47		An excellent series SUE 1345 Diversey Parkway Chicago, IL 60614 Film #18 Film #20
D. Quality Control	Have student design and construct quality control inspection gauges Activity 48	Ref. 35 Ref. 24	Film # 9 " #33 " #34 " #48 " # 3 Quality Cont.
E. Materials Handling	Have students contruct simple conveyor belts or other in plant transportation system		Film #12

OUTLINE	ACTIVITY	REFERENCE	AUDIO VISUALS
XIII. Maintenance and Services			
A. Definition			
B. Categories of service industries	Operate a services industry as part of class. Possible services offered could be: - bike repair - lawn mower tune up - saw sharpen shop - out board motor maintenance - appliance repair - furniture repair - tool repair Ref. 32, item 74-6 Ref. 20 Instructors Manual Activities 72A, 72B A52	Ref. 20	Film #30 film #26
C. Preventative Maintenance	Have students develop shop maintenance plan Have students develop maintenance plan for their car or family car Have students do basic machine maintenance Ref. 32 item 78-43		

OUTLINE	ACTIVITY	REFERENCE	AUDIO VISUALS
XIV. Manpower			
A. Manpower needs	Have students identify skills required for various production jobs. Ref. 32 item 74-14 Ref. 32 item 74-15	Ref. 1 Ref. 18 Ref. 14 Ref. 15 Ref. 17	
B. Training Program	-Have vocational school rep. come and talk to class -Have industry rep. come and explain in plant training program -Rep. from apprenticeship program		Film #45
C. Union Relations	Have students organize a union	Ref. 20	Film #47
1. Contract negotiations	Simulation # 6	Ref. 18	
2. Grievance Procedure	Simulation #14		
3. Union Organizing Activity	Simulation #26 Simulation #30 Set a student grievance procedure board.		

OUTLINE	ACTIVITY	REFERENCE	AUDIO VISUALS
XV. Energy and Power in Industry			
A. Need for Energy	A52, 53, 54, 55, 56	Ref. 36	
B. Sources of Energy	Ref. 32 item 75-17		
	Activities at end	Ref. 37	
C. Uses of Sources in Industry			

OUTLINE	ACTIVITY	REFERENCE	AUDIO VISUALS
XVI. Property			
A. Define	Activities in Ref. 27 under property	Ref. 27	American Industry Transparency Set
B. Classification of Property			
1. Permanent	Ref. 32 item 75-16	Ref. 24	
2. Temporary	Activities 57, 58, 59, 60, 61	Ref. 14	
C. Planning Property			
1. Purpose			
2. Type			
3. Quantity			
D. Maintenance			
1. Preventative			
2. Corrective			

STUDENT DIRECTED ENTERPRISE

The previous material has been organized so the student was exposed to the elements of industry via hands-on experiences. At this point, the students should have an (surface exposure) understanding of the elements of industry that has been related to the short teacher directed enterprise.

It is at this point that the students should be eager to apply what they have learned and expand their knowledge of industry via a student directed enterprise.

The student directed enterprise should have been the motivational force that made the students eager to learn about such things as flow process charts, marketing, etc. It is at this point that all of the previous learning should pay off. The teacher should sit back and be amazed with the students ability to run their own company. The teacher should at this point give the students the freedom to learn and experience the following:

Expand their knowledge of the elements of industry.
Understand their own opportunities and abilities.
Explore careers related to industry to include R&D, management, finance, etc. that have traditionally been ignored in shop classes.
Develop their problem solving skills.
Develop social and leadership abilities.

RECOMMENDATIONS

1. Guide students to selecting a realistic product. Start with a simple product, don't try to get too sophisticated too fast.

2. Good organization. The student must know what they are to do and what their responsibilities are.

3. Educate your administration.

4. Call the press. Sell program to community.

5. Enlist community resources.

6. Have a good teacher directed enterprise before you try a student directed enterprise.

7. Do not attempt to overcontrol the teaching situation. Give students freedom to learn; which incurs success and failure.

8. Relate to local industries and community.

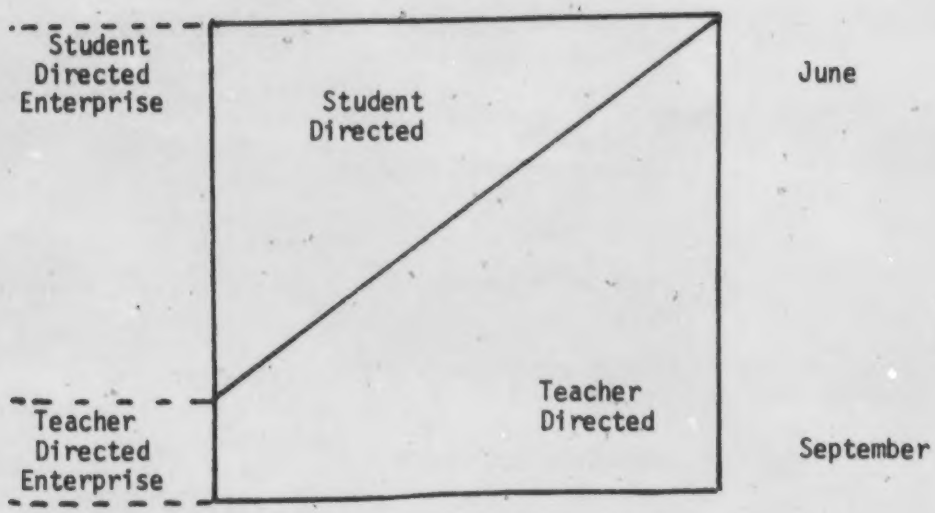

Students and course should progress from highly teacher directed to highly student directed.

STUDENT DIRECTED ENTERPRISE

OUTLINE	ACTIVITY	REFERENCE	AUDIO VISUALS
1. Introduction to student enterprise	Students select plan, produce, market and liquidate a company	Ref. 17, 24, 1	
2. Selecting and developing a Product		Ref. 2, 10, 8, 11	
3. Organizing and Financing	Ref. 32 item 75-23 Activities in Ref. 27 under student directed enterprise	Ref. 14	
4. Developing Production System		Ref. 24	
5. Providing Manpower		Ref. 26	
6. Manufacturing the Product		Ref. 24	
7. Marketing the Product		Ref. 3, 5	
8. Liquidation			

GOODS SERVICING

1. Diagnosis –

   A. Input
      - auditory
      - tactile
      - gustitory
      - visual
      - olfactory

   B. Process

   C. Output

Has to relate to these 6 kinds of product elements:
- biological
- physical
- mechanical
- electrical
- chemical
- thermal

Kinds of diagnosis
- normal sensory (without aids)
- extended sensory (feeler gauge, etc.)
- sensory+mechanical memory (computer, etc.)

2. Correction –

   A. Maintainance (superficial recond.)

   B. Repair (return or original specifications)
      - adjust
      - remove/replace
      - remove/rebuild/replace

   C. Alteration (change from the original specifications)

'The Repair Matrix'

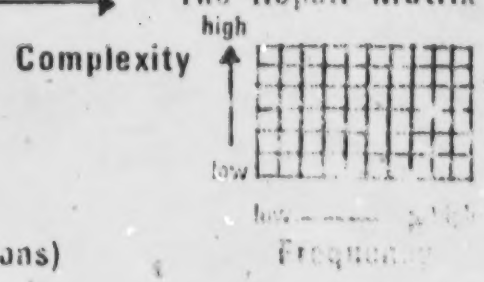

3. Testing –

   Very similar to diagnosis ...sometimes may actually work in reverse, etc.

Dr. Jacob Stern
University of Illinois

MODEL OF MANUFACTURING ENTERPRISE

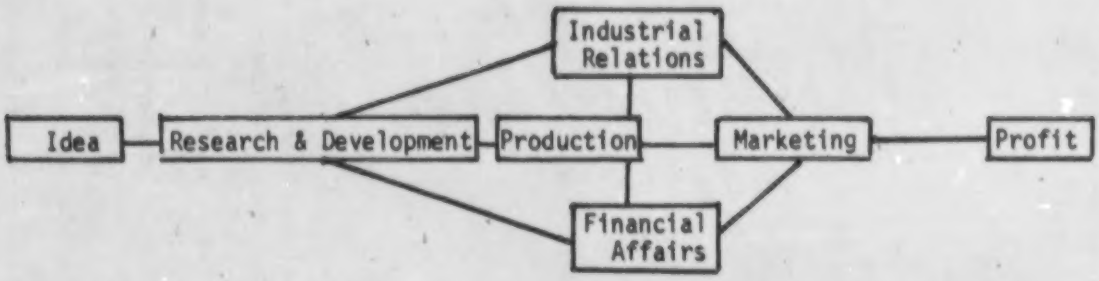

Product Life Cycle	Basic Activity Area
Selecting and Developing the Product	Research and Development
Organizing and Financing the Enterprise	Management and Financial Affairs
Developing the Production System	Production
Providing Manpower for Manufacturing	Industrial Relations
Manufacturing the Product	Production
Marketing the Product	Marketing
Handling the Money	Financial Affairs
Organizing and Operating a Union	Unions
Closing the Enterprise	

COURSE: MATERIALS AND PROCESSES

TOPIC OUTLINE	PERFORMANCE OBJECTIVES	SUGGESTED ACTIVITIES	RESOURCES
Unit I - Productive System	The student will be able to define the productive system as human effort to produce goods and services in hopes of making a profit.	Discussion-demonstration.	
	The student will be able to list and explain the five principal elements of the productive system and clarify the function of each. These being: (1) Research and development (2) Marketing (3) Finance (4) Production (5) Management	Discussion-demonstration. Students will conceptualize a graphic representation of the productive system. If students desire, they may free-hand sketch the product. Students may also use magazines, newspapers, etc. (as outside research) to make an 8" x 11" insert for class notebooks. Students are to list terms, definitions, and find or draw pictures to portray five basic procedures. The student is encouraged to use a variety of colors.	
I. Research and Development	The student will be able to explain the following things about research and development: (1) Its definition (2) Methods of research (3) Process of research (4) Professional persons involved in research and development	Discussion-demonstration.	
	The student will make rough and refine sketches and soft mock-ups of a product.	The students, with the aid of the teacher, will design a product for development. Example: a 3-dimensional tic-tac-toe game that is played with glass marbles. Two sets of four marbles will be required to play the game and the marbles should be stored within the game board body when not in use. The entire product should be small enough to fit inside a lady's purse or man's coat pocket.	See Appendix I-p. 8-9

TOPIC OUTLINE	PERFORMANCE OBJECTIVES	SUGGESTED ACTIVITIES	RESOURCES
	The student will be able to discuss the division of labor (specialization), its advantages and disadvantages; also, careers related to the manufacturing industry.	Discussion-demonstration.	
	The student will be able to operate machines and tools and produce the product they have designed, using a line production system.	The teacher and students will design and set up a production line system. The students will be assigned a work station and will produce a product in sufficient quantity for each class member to have a take-home product. All activities are to be performed up to, but not including, packaging. See Appendix I for a production line system. Handouts of materials in appendix should be made when needed. Supplies: Set of production tools 2" x 4" fir or spruce 1/16" plastics laminate Ornamental wood screws Sandpaper Screwdrivers Equipment: 2 drill presses Disc sander Radial arm saw Planer 2 routers Table saw Orbital sander Squaring shears	See Appendix I-p. 8-9
II. Marketing	The students will be able to discuss the following things about marketing: (1) Packaging (2) Research	Discussion-demonstration.	

TOPIC OUTLINE	PERFORMANCE OBJECTIVES	SUGGESTED ACTIVITIES	RESOURCES
	(3) Advertising (4) Sales (5) Distribution		
A. Packaging	The students will be able to discuss what items should be included on a package which is to be displayed. These are: (1) Picture or article or display or article contained within (2) Selling price (3) Materials from which article is manufactured (4) The manufacturer's name (5) Source of supply (vendor) (6) Essential selling features (uniqueness and strengths of product) (7) Instructions on how to handle and open package	Discussion-demonstration. With the aid of the instructor the students will do the following: (1) Itemize the content which should be printed on package. (2) Print content on package material. (3) Shear chipboard package material. (4) Fold package into proper shape. (5) Inspect, clean, and package product. Example for a tic-tac-toe package is shown in Appendix I. Supplies: Manufactured tic-tac-toe games Printed packaging stock Steel rule die Marbles, 2 sets of 4 each of 2 colors Cleaning rags Transparent tape Equipment: Press for steel rule die	See Appendix I-p. 9
B. Market Research and Advertising	The student will be able to explain specifically the research and advertising phases for marketing a product. Example: a trivet set. The student will be able to discuss the following about research: (1) Present availability of product (2) Public interest - assessed by researching consumer survey report (a) Customer demand for product	Given a list of guidelines to follow, the student will compose an appropriate advertising media for the sale of a product. With the use of the consumer survey form, the students will conduct a consumer survey involving administrators, teachers, and students of their school, as well as community residents, to determine public receptiveness of the product.	See Appendix I-p. 10-12

TOPIC OUTLINE	PERFORMANCE OBJECTIVES	SUGGESTED ACTIVITIES	RESOURCES
	(3) Consumer economics The student will be able to discuss the following about advertising: (1) Media (2) Audience, who will use product (3) Principal elements of advertising	Students will use graphic representations, captions, and poster paper to make an advertising brochure for the product. Students will select brochure that will best represent and depict the product. See Appendix I for more information on trivet set, advertising, and consumer survey form. The principles of sales and distribution will be discussed later in this unit.	
III. Production Quality Control	The student will be able to discuss the following concepts of production and apply them to the ensuing production of a product - (trivet set): (1) Production tooling or "tooling up" directed very closely by research and development (2) Production control - planning, routing, scheduling, and dispatching (3) Types of production (4) Quality control - those activities designed to keep defective items from being produced, or, if they are produced, keep them from reaching the market (5) Interchangeability of parts	The student will cut and form metal parts to quality control specifications. Assign students to various work stations and give specific instructions on quantity of metal components to be produced. Cutting and forming operations are to be completed on all metal parts. Production of metal components used in the trivet set will be performed with line production techniques.	

Louisiana State Dept. of Ed.

COURSE: MATERIALS AND PROCESSES

TOPIC OUTLINE	PERFORMANCE OBJECTIVES	SUGGESTED ACTIVITIES	RESOURCES
IV. Production Control	The student will be able to discuss the concept of production control as applied to the finishing system for the trivet set. The student will be able to explain the reasons for applying finishes and discuss the types of finishing materials.	Discussion-demonstration. The students will clean the handle and base of the trivet set. They will dry them and apply the primer by following the production controls given to them. See Appendix I for critical path for priming sequence.	See Appendix I-p. 9
V. Management	The student will be able to explain the importance of managing all aspects of the productive system, such as: planning, organizing, and controlling of persons, ideas, and things, as these concepts are in evidence in the various production of products. Example: tic-tac-toe game and trivet set. The student will be able to discuss the following: (1) Types of company organization (2) Top management (3) Operational management (4) Management and personnel (5) Qualities of a good manager (a) His span of control (b) Leadership and decision-making ability	Discussion-demonstration. The instructor will demonstrate: (1) locating fixtures, (2) riveting procedure, and (3) installation and grouting of ceramic tile. The students will combine components with rivets and install ceramic tile to trivet set.	
VI. Sales	The student will be able to explain the concept of selling and distribution as applied to how to sell and distribute a product. Example: trivet set. He will be able to explain the following terms about sales:	Discussion-demonstration. Students will role play personal sales and will collect firm purchase orders outside of class time. Production of the trivet set will continue as students clean grouting off ceramic tile and prime rivet heads and assembly scratches.	See Appendix I-p. 15

TOPIC OUTLINE	PERFORMANCE OBJECTIVES	SUGGESTED ACTIVITIES	RESOURCES
	(1) Demand (2) Competition (3) Product guarantees (4) Impersonal selling (5) Personal sales		
VII. Production Completion	The student will be able to apply the final coat of finish to assembled product, (trivet set). He will be able to discuss the following: (1) Reasons for application of a final coat over the surface of a primer coat (2) Procedure for application of the final coat	Discussion-demonstration. The student will mask off and spray paint the final coat of finish to the trivet set.	
VIII. Distribution	The student will be able to provide cushioning for the trivet set by dipping it into a heated vinyl liquid and prepare the set for distribution. The student will be able to discuss the following things as applied to distribution: (1) Direct or indirect distribution (2) Transportation (3) Receipt of merchandise	Discussion-demonstration. The student will provide cushioning to the trivet feet, prepare the set for distribution, and distribute the merchandise.	

Louisiana State Dept. of Ed.

SEQUENTIAL OUTLINE OF ACTIVITIES
FOR A COURSE IN INDUSTRIAL PRODUCTION
(60 hours)

I. PREREQUISITES

A. Minimum of one year of industrial arts experience

B. Manipulative skills in common industrial arts courses

1. Sketching and mechanical drawing, woodworking, metalworking

C. Personnel selection (selection of participants)

1. Written application (see appendix pp. 12)

2. Interview (see appendix p. 14)

II. INTRODUCTION TO THE MANUFACTURING INDUSTRY

Extensive use of films, lectures by personnel from industry, tours of industrial plants, and selected reading will help the students develop a greater understanding and appreciation of the manufacturing industry. (See appendices for listings.)

A. Essentials of Industry

1. Natural Resources

2. Human Resources

3. Capital Resources

B. Functions of Industry

1. Research and development

2. Production tooling

3. Production control

4. Quality Control

5. Personnel management

6. Manufacturing

7. Marketing

C. Mass Production

1. Interchangeability of parts

2. Automatic conveyors to move parts

3. Specialized labor

4. Elimination of wasted effort and motion

5. Automation and computerized manufacturing

6. Better products at lower cost

D. Major Phases of Mass Production

1. Pre-production planning

2. Tooling up

3. Production

4. Distribution

E. Advantages and Disadvantages of Mass Production

F. Labor Relations

1. Management functions

2. Labor functions

G. Aerospace Industry

1. Zero error

2. Human resources

III. HISTORY AND DEVELOPMENT OF MASS PRODUCTION

A. Before 1870

B. After 1870

C. Present Industry

D. Future Industry

IV. AMERICAN ECONOMIC SYSTEM

A. Theory and Function of Business and Industry

B. Formation of a Corporation

1. Class is the "board of directors".

2. President of the "board" is appointed. He presides over the board meetings and acts as Personnel Director.

3. Board of Directors appoints management positions.

V. MAJOR DEPARTMENTS ARE ORGANIZED

A. Engineering Department headed by:
The Vice-President of Engineering, appointed by the Board of Directors

1. Personnel

a. Engineers

(1) Metals Engineer
(2) Woods Engineer
(3) Plastics Engineer
(4) Design Engineer

b. Inspectors

2. Department Responsibilities

a. Develop and design a product with assistance from class. Consider possible by-products (ex. cedar wood shavings).

b. Make scale drawings of the product.

c. Design jigs, fixtures, and templates.

d. Design gauges for measurement (Quality Control).

e. Develop production flow chart (with assistance from production department). (See appendix p. 19)

f. Design packaging

g. Set up a system for inspections.

h. Final report to the Board of Directors

B. Production Department headed by:
The Vice-President of Production, appointed by the Board of Directors

1. Personnel

   a. Production Foreman

   b. Personnel Director

   c. Production workers

2. Department Responsibilities

   a. Work with Engineering to determine work stations needed (job and operations chart). (See appendix p. 20)

   b. Operation of the production line (plant layout)

   c. Construction of the prototype

   d. Construction of the jigs, fixtures, and templates

   e. Job description

   f. Establish safety procedures (with Personnel Director)

   g. Training of workers

   h. Time and motion study (with Finance Dept.)

   i. Final report to the Board of Directors

C. Finance Department headed by:
The Vice-President of Finance, appointed by the Board of Directors

1. Personnel

   a. Advertising Manager

   b. Salesmen

   c. Timekeepers

   d. Purchasing Agent

   e. Accountant

2. Department Responsibilities

a. Conduct a market survey. (See appendix p. 21)

b. Purchase and inspect materials.

c. Print and sell stock.

d. Figure cost to produce each product.

e. Determine selling price.

f. Advertise

g. Conduct sales

h. Determine the number of units to manufacture.

i. Keep production charts and records.

j. Keep time cards.

k. Dissolve the corporation.

l. Final report to the class.

VI. PRODUCT DEVELOPMENT

A. Engineering Department Organizes Research and Development Groups (4-5 per group)

1. Sketch possible products.

2. Provide list of operations.

3. Make labor prediction manpower.

4. Make rough cost analysis.

B. Board of Directors Makes a Final Selection of Product to Manufacture

1. Criteria

a. Potential market

b. Complexity

c. Interchangeability

d. Low selling price

e. Feasibility

2. Engineering develops four different designs of the product

3. Market survey is conducted by the Finance Department

C. Final Analysis of Product by the Board of Directors

1. Market Survey report

2. Final drawings are presented to the Board of Directors

3. Establish procedure for building the prototype

4. Cost and material list for the prototype

5. Production department builds the prototype

6. Board of Directors evaluates prototype (re-design if necessary)

D. Finance Department Prepares for Production

1. Print and sell stock

2. Advertise

3. Order materials

E. Development of the Manufacturing Sequence

1. Job and operation breakdown

a. Plan carefully and document because all other steps in the sequence flow from it.

b. Breakdown is done in three phases.

(1) Job (part) and Operation (how part is manufactured)

(2) Add list of tools and/or jigs and fixtures for the performance of each operation.

(3) Finance Department adds "timestandard" column.

c. Useful in designing jogs, fixtures, and templates

3. Flow charts of each part are developed to show processing steps.

a. Develop from the "Operation" column of the Job and Operation Chart

4. Finance Department develops a Bill of Material for production (shows cost of materials in a single unit).

5. Plant Layout Chart

   a. Designates location of machines in the plant

   b. Shows flow of materials or parts in production

      NOTE: If each part will take one class period to produce, a flow chart for each part is necessary.

6. Production Department develops a Job Description Chart

   a. Consists of Job and Operations Chart

   b. Consists of assignments of people to specific operations by the Production Foreman

7. Job training

   a. Production Foreman trains workers on specific jobs

   b. Inspectors are trained by Engineering and measurement gauges and devices are made.

8. Trial run with time and motion study

   a. Detect errors or unexpected problems

   b. Establish safety program

   c. Production data is recorded and graphed

VII. SALE OF THE PRODUCT

A. Finance Department Sells the Product and Computes the Profit

B. Corporation is Dissolved

VIII. FINAL REPORTS TO THE BOARD OF DIRECTORS

A. Engineering Department

1. Number of units produced

2. Possible improvements

3. Value of careful planning

4. Etc.

B. Production Department

1. Bottlenecks

2. Worker's problems

3. Production improvements

4. Etc.

C. Finance Department

1. Sales

2. Profits

3. Dividends

4. Production graphs and charts

5. Etc.

Source Unknown

KEY

1. Large Grouped Instruction

2. Simulations and Games

3. Individual Problem Solving Project

4. Contract

5. Self-Instruction Package and Activity or Tape

Unit or Concept

6. Group Production Activity

Open Lab or Station-to-Station

7. Computer Based Instruction

8. Single Concept Loop Films or Slide Series

Notes
Activity
-Define Industry, Environment of Industry, Year Activities
Intro. to Am. Ind.
7
Computer Based Course Introduction
5
Enterprise Package (Self-Instruction Tape)
8
Single-Concept Loop Films on 13 Concepts
7
Computer Simulation on Environment of Industry
2
Economic System Game
-Basic Intro. to Common Elements of Industry
First Company Activities
6
Job Interview & Placement
6
Trial Run
6
Production Run
6
Marketing & Sales
First Year A.I. Ultimate Program
Communication
3 5 3
3 5 3
3 5 3
3 5 3
Basket Approach Student Must Complete all Eight in Any Order:
-Black & White Photo
-Offset-Letter Press
-Videotape-Slide Series
-Litho-Hand Silk
-Photo Silk-Drafting
Communication Contract

Activities
Notes
7
Computer Based Introduction
2
Stock Market Game
5
Intro. Finance Pack
(Self Instructional Tape)
2
Monopoly
5
Money Management
(Self Instructional Tapes)
Toys for Tots
Finance Contract
8
Loop Films on R & D
3
Basket Approach
to R & D Activities
Students Must
Complete All
4
R & D Contract
6
Toys for Tots
Product Development
6
Toys for Tots Production
Finance
-Begin Toys for Tots Money
Collection & Management
-Student Checking Account
Research &
Development
-Student Assume More Control of
Product Development & Production

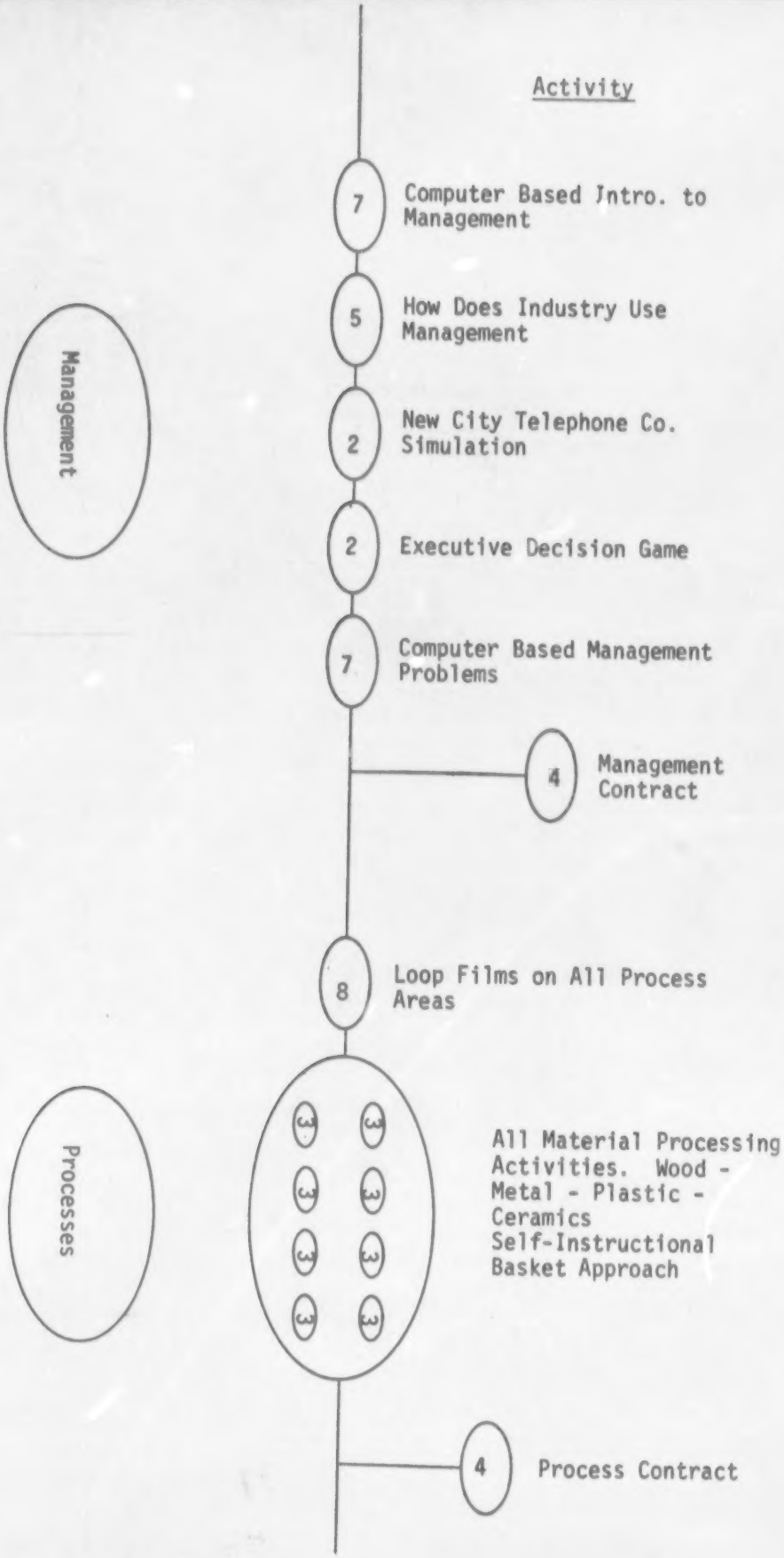
Notes
Activity
Management
7
Computer Based Intro. to Management
5
How Does Industry Use Management
2
New City Telephone Co. Simulation
2
Executive Decision Game
7
Computer Based Management Problems
4
Management Contract
8
Loop Films on All Process Areas
Processes
3
All Material Processing Activities. Wood - Metal - Plastic - Ceramics Self-Instructional Basket Approach
4
Process Contract

Notes	Activity	
Materials	1	Intro. Materials
	Station-to-Station	Station-to-Station Materials Testing Activities
	Station-to-Station	Station-to-Station Raw Materials Processing Activities
	4	Materials Contract
Property	1	Intro. Property
	3	Equiping the Factory Activity
	6	Flexible Plant Layout (Research Class)
-Redesign Current Facility to Allow Equipment to be Moved for Practical Plant Layout	4	Property Contract

91

Notes

Activity

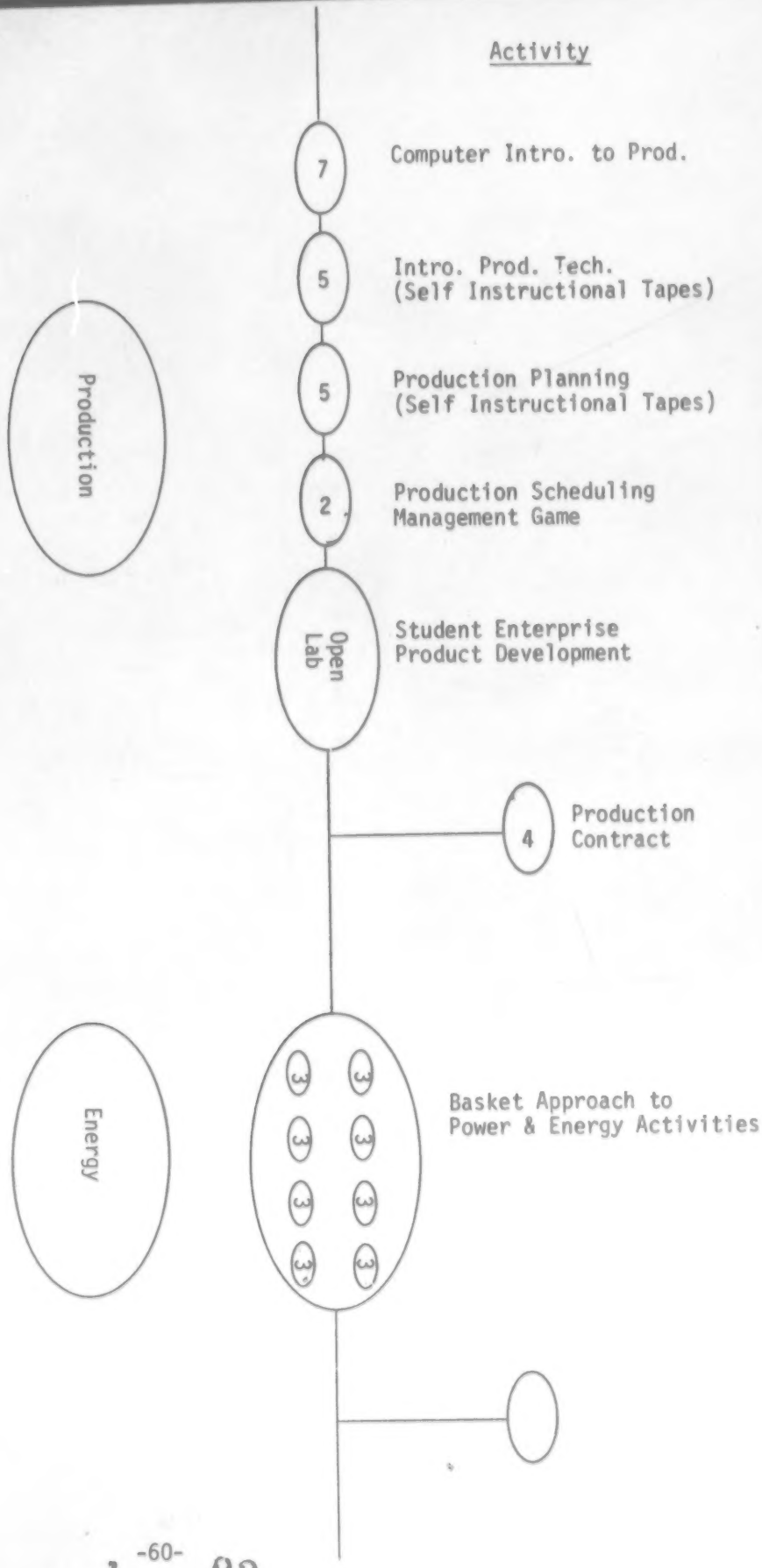

-Energy Needs to be Added to Current A.I. to Offer Better Overview of Ind. Ed. Program & Industry

Notes

Activity

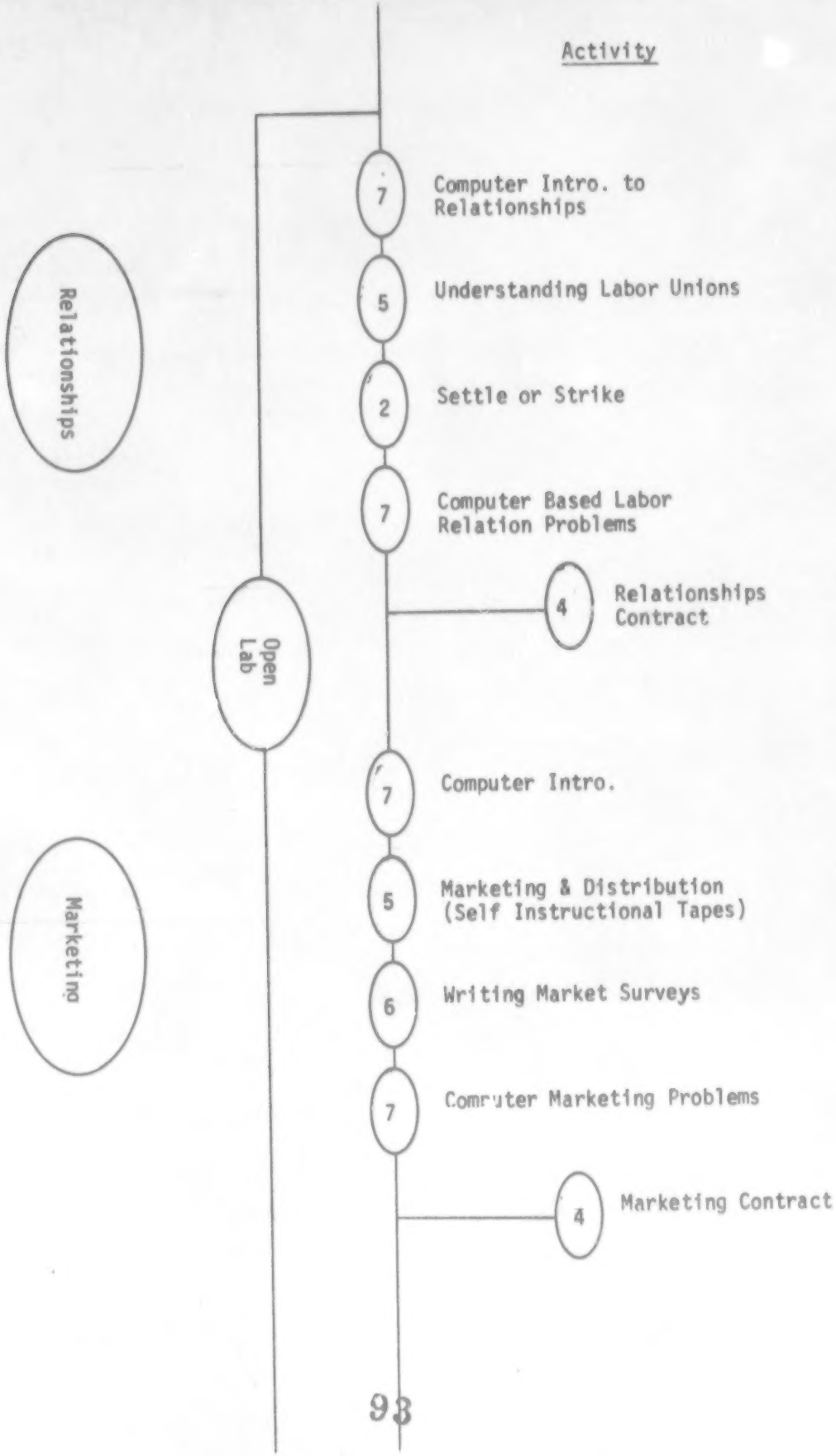

-Entire Last Quarter is Directed Towards Student Managed Enterprise

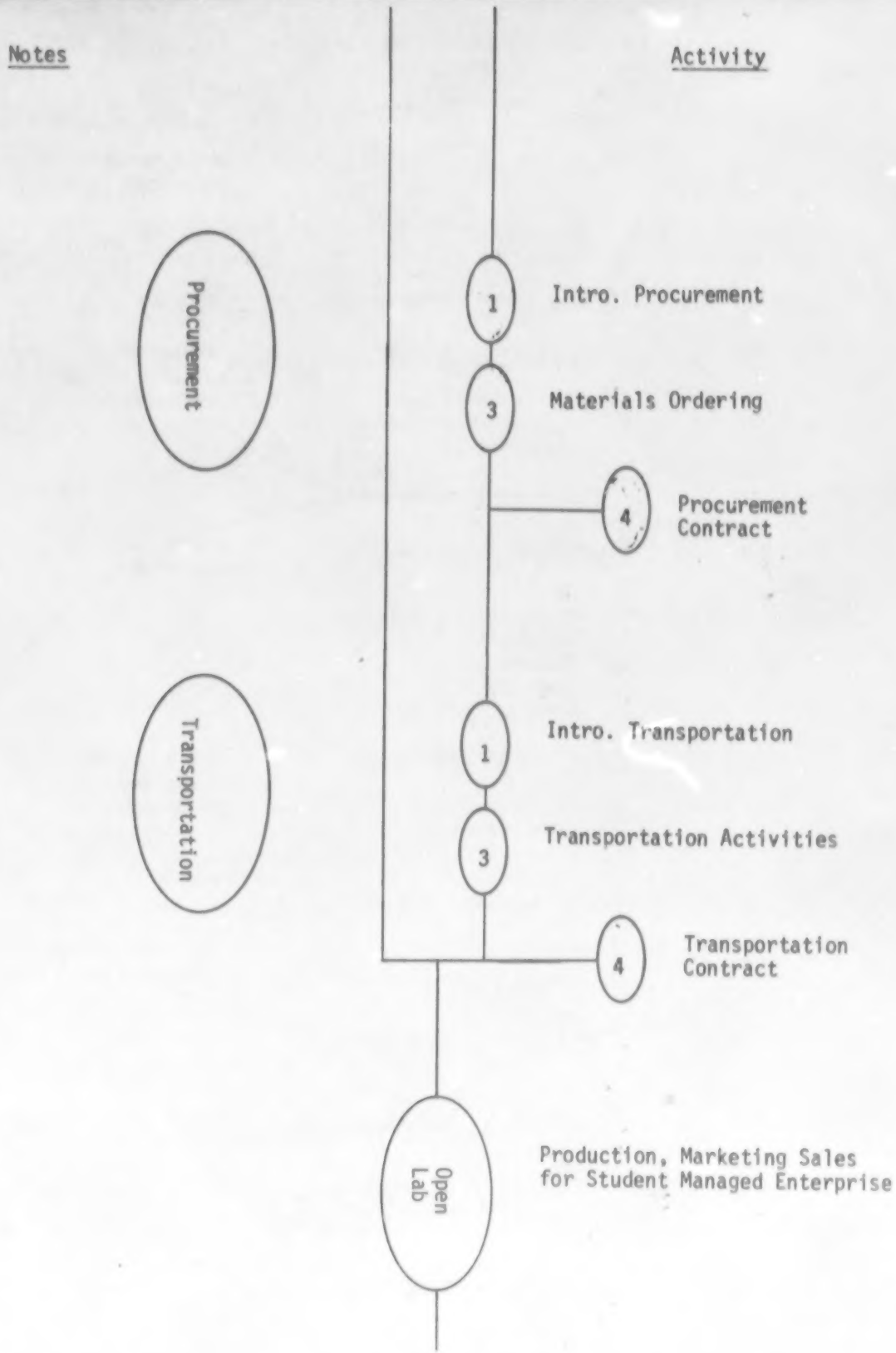

by Robert Hendricks

LEVEL I - AMERICAN INDUSTRY COURSE OUTLINE

TEACHER DIRECTED

	Units and Features	Unit Theme
Unit I	Industry Today 1. Introduction to American industry 2. Resources of industry 3. The environment of industry 4. The basic parts of industry	Let's analyze industry.
Unit II	The Evolution of Industry 1. The needs of man 2. A search for greater productivity 3. Some effects of man's quest for productivity	The needs of man and why he progressed.
Unit III	Organizing an Enterprise 1. Communication 2. Research 3. Management 4. Finance 5. Property 6. Energy	- Let's start a business.
Unit IV	Operating an Enterprise 1. Relationships 2. Procurement 3. Materials 4. Processes 5. Production	- Let's produce using modern production methods.
Unit V	Distributing Products and Services 1. Marketing 2. Transportation	- Why does a product sell?
Unit VI	The Future of Industry 1. State of the art 2. Reasons for change 3. Future expectations	- Where do we go from here?
Unit VII	The Students' Business Venture 1. Development 2. Fabrication 3. Marketing 4. Evaluation	- The students organize, produce, and sell.

STUDENT DIRECTED

Figure 3

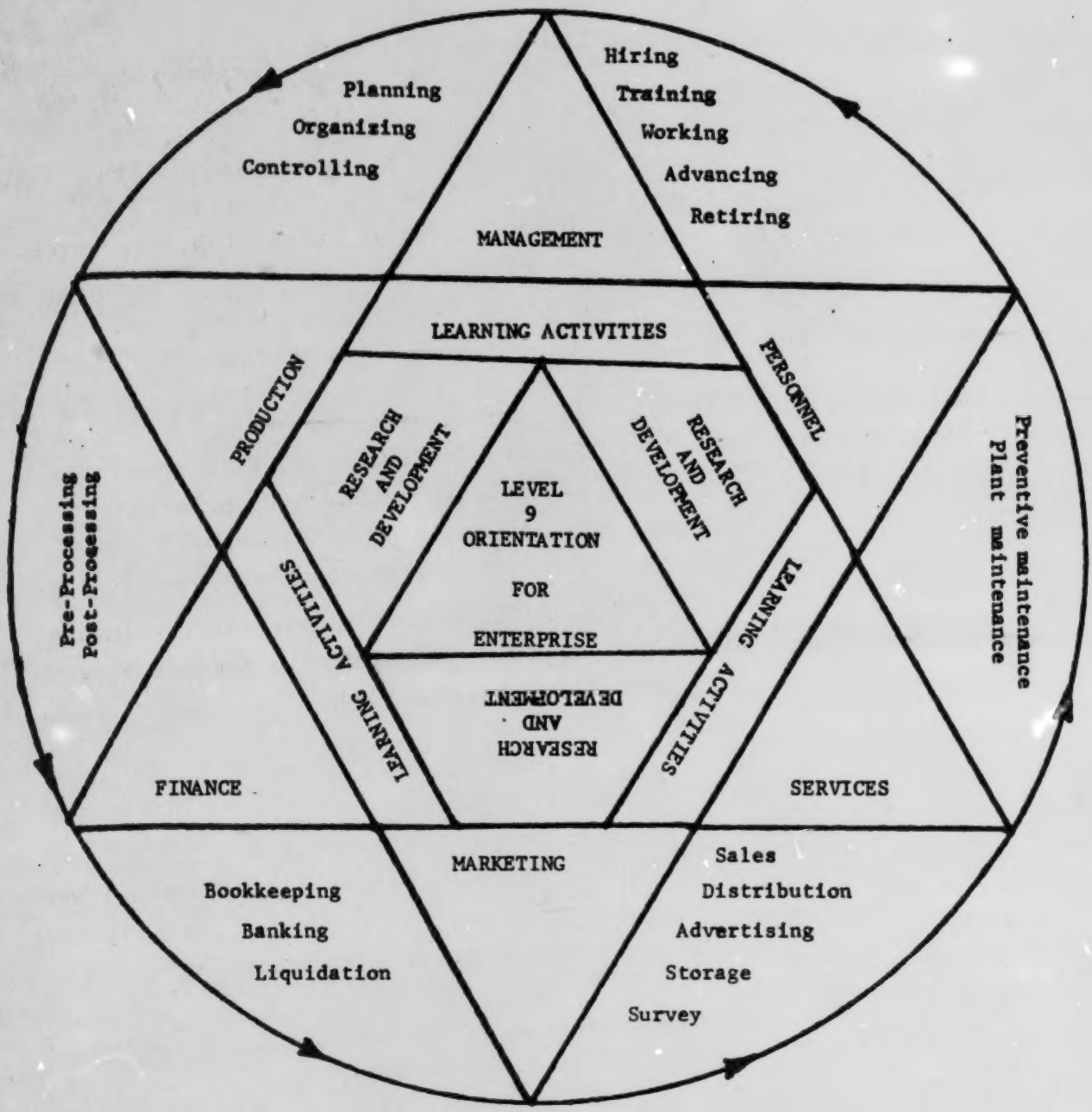
Planning
Organizing
Controlling
Hiring
Training
Working
Advancing
Retiring
MANAGEMENT
LEARNING ACTIVITIES
PERSONNEL
PRODUCTION
RESEARCH AND DEVELOPMENT
LEVEL 9 ORIENTATION FOR ENTERPRISE
RESEARCH AND DEVELOPMENT
Preventive maintenance
Plant maintenance
Pre-Processing
Post-Processing
LEARNING ACTIVITIES
LEARNING ACTIVITIES
RESEARCH AND DEVELOPMENT
FINANCE
SERVICES
MARKETING
Bookkeeping
Banking
Liquidation
Sales
Distribution
Advertising
Storage
Survey

CONTENT OUTLINE

Study of Industry
Westfield High School
Mr. Squier

Time	Activity
Week 1	I. Orientation
	A. Introduce Students to Course
	Job Attitude see Beloit Corp. speech
	1. discuss how course operates
	2. discuss what they will learn
	B. Tour of Shop and Machinery
	C. Discuss General Rules, Lab Procedures, and Policies
	D. General Safety
	E. 12 Concepts of Industry
Week 2	II. Development of Industry
	A. History of Industries Development
	1. 100 B.C. - 900 A.D. primitive
	2. 1000 - 1399 middle ages
	3. 1400 - 1699 renaissance
	4. 1700 - 1899 industrial revolution
	5. 1900 - 2000 atomic and space age
	B. Basic Needs of Man
	1. food
	2. clothing
	3. shelter
	C. Inventors
	Eli Whitney, Robert Fulton, Samuel Morse, Henry Ford, Oliver Evans, John Winthrop, Cyrus McCormick, Fredwick Taylor.
Week 3	III. Overview of Industry
	A. Classes of Industry
	1. raw materials
	2. manufacturing
	3. distribution

(continued)

4. service

Act. List the 13 concepts from week 1 and place into 1 of the 4 groups of industry

Act. Make a list of all industries you can think of and classify.

B. Define Industry

C. Resources of Industry Human Natural

D. Why Men Work

Week 4 — IV. Applying for Job Career Awareness

A. Job Application

B. Job Interview with Guidance Counselor

C. Worksheets - Keeping a Job & Attribute of Good Worker

Act. Select a career and research it.

Week 5 — V. Small Mass Production

A. Introduce Mass Production Idea

B. Research & Design

1. define the problem
2. collect information
3. form a hypothesis
4. test hypothesis
5. select & evaluate

C. Select Product and Mass Produce

Week 6

D. Plan

E. Organize

1. contract negotiate between worker & management

Week 7

F. Tool Up for Production

1. make jigs & fixtures
2. train for machine operation

Week 8

G. Produce

Week 9

H. Sell Product

I. Evaluate

2ND 9 WEEKS

Week	Activity
Week 9	I. Communications
	A. Attributes of Communications
	1. message
	2. source
	3. vehicle
	4. receiver
	5. interference
Week 10	B. Measurement
	1. reading a ruler
	2. reading a scale
Week 11	C. Freehand Sketching
Week 12	D. Isometric
	E. Orthrographic
	F. Reading a Blueprint
Week 13	II. Research & Development
	A. Types
	1. pure
	2. applied
	Act. Package egg and drop from School
	B. Process of R & D
	1. collection of data
	2. lab testing
	3. refer to scientific method of research
	C. Careers in R & D
	D. R & D Problem
Week 14	III. Market Research
	A. Availability of Product
	1. stores
	2. media
	3. can a new product compete

(continued)

B. Public Interest
   1. customer demand for a product
   2. personal representative
   3. economics
C. Break even Chart
D. Analysis of Consumer Survey
   1. who is the market
   2. what is the demand
   3. what price will market tolerate
E. Activity - Make a supply & demand chart
F. Activity - Develop a consumer survey form
   (see p. 24 CBIE)

Week 15

IV. Productive System
A. Quality Control
   1. define
B. Production Tooling or "Tooling Up", directed very closely by research & development.
   1. decide what tools are needed.
   2. what tools are to be purchased
   3. what tools are to be made
C. Production Control
   1. Planning
   2. routing
   3. scheduling
   4. dispatching
   5. bill of materials
   6. route sheet
   7. flow chart
D. Types of Production
   1. custom
   2. limited
   3. mass production
   4. continuous
   5. batch
   6. intermittent

(continued)

E. Quality Control Activities
   1. defect or rejection records
   2. customer complaints
   3. Inspector training
   4. employee & morale meeting
F. Interchangability of Parts
   1. refined
   2. importance
   3. tooling required
      a) dies & molds
      b) cutting dies
      c) templates
      d) jigs & fictures
      e) gauges

Week 16

V. Management
   A. Define
      1. planing
      2. organizing
      3. controlling
         a) persons
         b) ideas
         c) things of a company
   B. Types of Company Organization
      1. corporation
      2. partnership
      3. proprietorship
   C. Top Management
      1. stockholders
      2. board of directors
      3. president
   D. Operational Management
      1. vice president
      2. foreman
      3. heads of departments
   E. Management & Personal

(continued)

1. hiring & firing
2. employee morale
3. employee benefits
4. fosters co-operation
5. allows bargaining
6. provides advancement

F. Qualities of a Good Manager

1. span of control
   a) delegate authority
   b) variables
2. leadership & decision making abilities
   a) knows how fast a pace to set
   b) gathers all facts
   c) listen to input
   d) decisive
   e) encourages group decision making

Week 17

VI. Sales

A. Sales

1. define
2. seller & buyer benefit
3. satisfied customer is a good salesman the future sale of product
4. demand - created thru advertising
5. competition
6. product guarantees
7. impersonal selling
   a) coupons
   b) vending machines
8. characteristics of a good salesman
   a) introduce yourself & company
   b) be courteous, not pushy
   c) present the product
   d) present opportunity to view & handle the product

(continued)

e) price & collection (terms)

f) take order

g) thank customer even if he does not wish to buy

h) you are a representative of company leave a good impression

Activity - Role playing a sales procedu adhering to sales techniques outlined

Week 18

VII. Distribution

A. Direct

B. Indirect

C. Transportation

1. fastest
2. safest
3. least expensive
4. planned means of shipment of goods
5. packaging
6. routing
7. perishable & non-perishable goods
8. receiving
9. inspection
10. storing

D. Receipt of merchandise

1. inspect
2. follow up satisfaction
3. thank customer

2nd Semester

VIII. Large Mass Production (Student Directed)

Student directed and controlled by Management. Activity is designed for student to test their knowledge of all area of Industry with a hands on activity.

IX. Government

(continued)

X. Environment

XI. Natural Resources

XII. Private Property

LEARNING ACTIVITIES:

The ultimate success of any program centers in the quality of the instruction that takes place. Central to this success is the quality of the teaching and learning activities that are used in meeting stated objectives.

Industrial education programs have always focused on the laboratory approach of "learning by doing." The ideas for teachers and the learning activities for students that are included in this handbook were selected as exemplary learning experiences.

Industrial education programs should be exciting, relevant, and action oriented. Well designed activities, selected from a variety of sources, that motivate students are included as suggestions for improving instruction.

ACTIVITY #1

Obtain a safety policy from a local community. Divide the students up into groups of four and have them list why the employees must follow the rules.

After the groups have given the reports to the class assign them to make a poster on the rule they reported on.

ACTIVITY #2

SAFETY

Before any student can work with the tools and machines in the laboratory, they must pass a safety test and have the following statement signed by their parents or guardian.

My consent is hereby given to _____
(Student's name)

to use the POWER MACHINES AND TOOLS in use in the school Industrial Arts Laboratory provided instructions have been previously given by the teacher.

_____
(Parents' or guardian's signature)

Study the following safety rules before taking the safety test:

1. When you first enter the laboratory at the beginning of the period, go directly to your assigned workbench.
2. Avoid making unnecessary noise in the laboratory.
3. In case of any injury, report immediately to the instructor.
4. Never wear loose clothing or jewelry in the laboratory.
5. Do not use any tool that has a loose handle.
6. Never blow chips with air when another person is near.
7. Handle paint thinners, gasoline, and other combustible materials with care.
8. Never start any machine until safeguards are in place.
9. Keep fingers away from moving parts of the machines.
10. Never oil or adjust any machine while it is in motion.
11. Never start any power machine until you have the instructor's permission.
12. Never indulge in "horse play" in the laboratory.
13. Never use a file that does not have a handle.
14. Never use a hard tool as a pry.
15. Only one person at a time should operate a machine; others stay outside the safety lines.
16. Always report to the instructor any breakage or damage to tools, machinery, or equipment.
17. Always keep your eyes and mind on your work.
18. Keep floors, aisles, and passageways clear of stock, tools, and materials.
19. Never run in the laboratory.
20. Never use a tool or machine until you have been thoroughly checked out on its proper use and safety precautions to be observed while operating it.
21. Any boy with excessively long hair must wear a hair net while operating any power machine.
22. Put all oily rags in closed metal containers to prevent possible fire.
23. Use safety goggles or a face shield when any operation which endangers your eyes is being performed in the laboratory.
24. Use the tools and machines for their intended purpose only.
25. Be careful how you carry tools.
26. THINK.

_____ has passed the required safety test with
(Student's name) a score of _____.

_____
(Signed by instructor)

ACTIVITY #3

RELATING OUR FIRST ENTERPRISE TO THE THIRTEEN CONCEPTS OF AMERICAN INDUSTRY

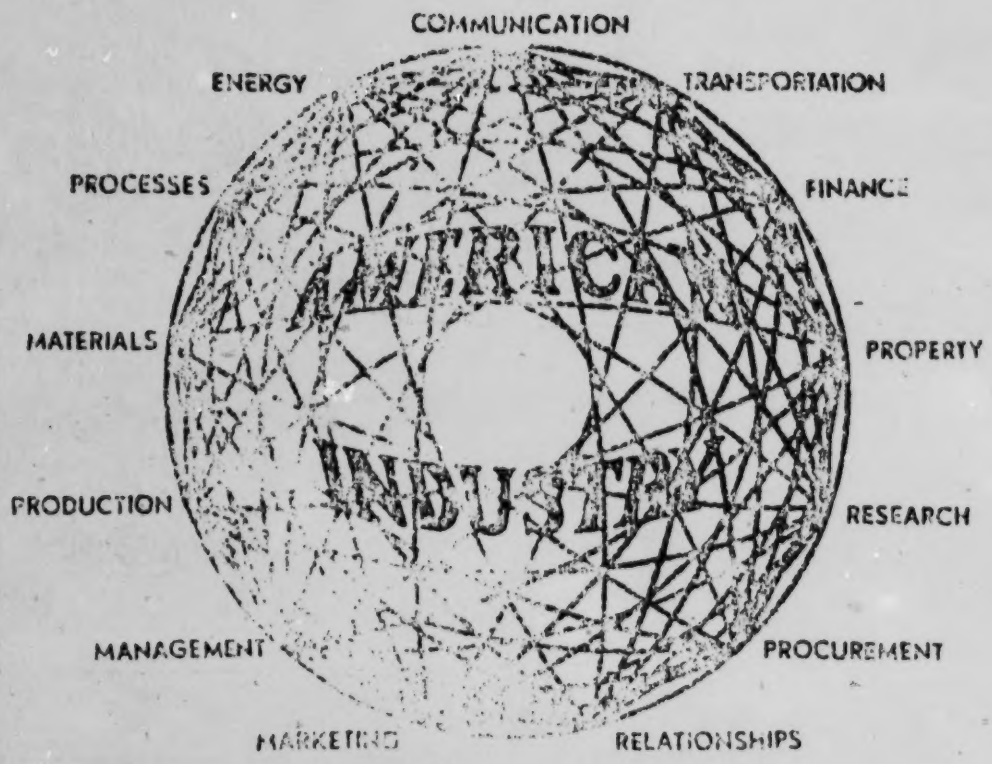

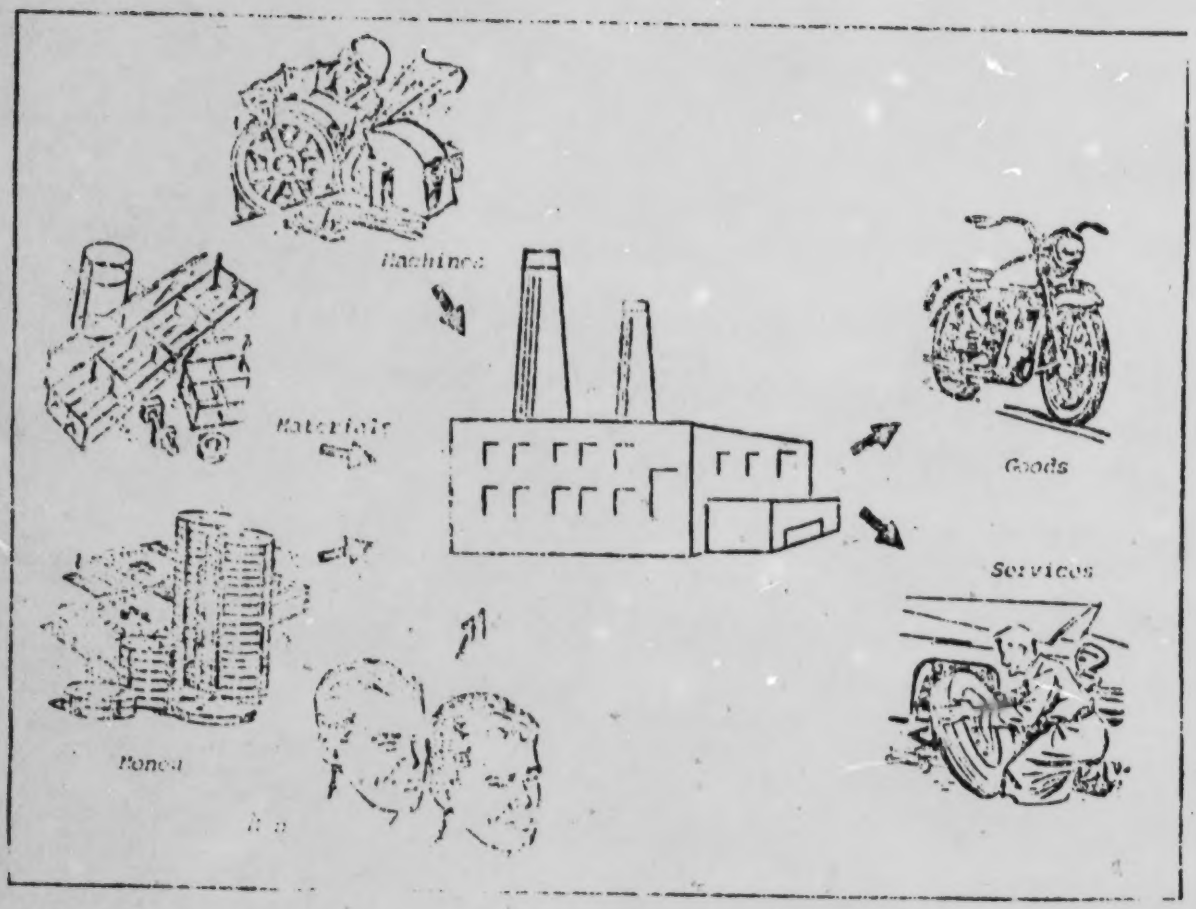
Machines
Materials
Goods
Services
Money

Industry, as we shall study it, is broken down into 13 concepts. These concepts are common to all industries. We shall study these concepts, one at a time, throughout the year and relate them to the various enterprise experiences.

In the first company we hoped to expose you to what industry is. Now we would like to have you look back and try to identify the 13 concepts in your first company.

On page 79 the 13 concepts and a short definition are listed. Read these over and if you have any questions about them see your instructor.

On page 80 you will find the 13 concepts and a space for you to write. Try to list as many activities of the first enterprise as you can that relate to that specific concept. There might be some overlapping but that's O.K. Try to be as thorough as you can. The first concept "COMMUNICATIONS" is done for you.

GOOD LUCK

CONCEPT DEFINITIONS

Communication: The act of conveying ideas by means of signs and symbols for the purpose of affecting behavior.

Transportation: The planned movement of people and/or materials from one location to another.

Finance: The considerations and techniques involved in procuring and controlling the funds needed to develop and maintain an enterprise.

Property: Holdings or possessions of an enterprise upon which a dollar value may be placed.

Research: A systematic and unbiased investigation of a problem in order to discover facts or principles.

Procurement: The locating and acquiring of the property and services needed by industry.

Relationships: Associations between individuals, organizations, and industry that are effected to promote the interests of the people and organizations involved.

Marketing: Those activities of an enterprise that cause the consumer to procure its product(s).

Management: The guiding and directing of all industrial activities in the most efficient manner.

Production: Those activities of an enterprise which are primarily concerned with the generation of specified goods or services.

Materials: Anything in the universe that is made up of matter and has substance in gross structural forms or constituents at the macroscopic level.

Processes: The systematic series of actions involved in the transformation of materials in the production of goods or services.

Energy: The ability or capacity to do work.

CONCEPTS

COMMUNICATIONS - There was both communications within the company and outside the company. We had to communicate in Production using Flow Charts, Inventory Control charts, and other forms. We had to communicate what we wanted the company to do at company meetings. We had to tell each other what was going wrong and what to do about it. We had to communicate to the school that we had a quality product to sell. YOU FINISH IT.

TRANSPORTATION

FINANCE

PROPERTY

RESEARCH

PROCUREMENT

RELATIONSHIPS

MARKETING

PRODUCTION

MATERIALS

ACTIVITY #4

OAK GROVE JUNIOR H.S.
Industrial Education
PRODUCT DESIGN & DEVELOPMENT

NAME_____

MODS_____ FOLDER_____

RATIONAL: Designing is the complete act of creating a product. When you design a project, you must plan it completely and also make a set of working drawings.
The design process is in 3 parts:

CREATIVE - this is the expression of your own ideas and feelings into the design

TECHNICAL - this part is the ability to first make the working drawings, and then the ability to work from the drawings using tools skillfully to actually build the product.

AESTHETIC - this is the ability to design something that appeals to other peoples senses.

REQUIRED WORK

- ☐ - Study the design limitation and variables chart PAGE 1
- ☐ - Draw a minimum of 4 thumbnail sketches of possible products PAGE 2
- ☐ - Draw 2 preliminary sketches, actual size. PAGE 3
- ☐ - Show these sketches to your ACOUNTABILITY PERSON for approval. He will OK your work. PAGE 3
- ☐ - COnstruct a working drawing of your product, top view only, with dimensions.
- ☐ - Complete the Bill of Materials Section PAGE 4
- ☐ - COmplete the Planning Procedure Section PAGE 4

COMPANY OVERTIME OPTIONS

# INDUSTRIAL DOLLARS	ACTIVITY
Up to 4	Obtain a piece of green drawing paper from your ACOUNTABILITY PERSON. Make an Isometric Drawing of your proposed product that could be used in advertising.
Up to 4	Think up an idea for a possible product that your entire company could produce for sale. Puzzles, games, etc. are good products. Make a working drawing of the idea. Get approval from your ACOUNTABILITY PERSON <u>BEFORE</u> you begin.

PROBLEM: You are to assume that you are an Industrial Designer. Your company has given you the responsibility of designing a product that:

1. Will provide a place for important keys to be stored when not needed. Examples: garage key, suit case keys, car keys, extra house keys, etc.

2. Will hold important letters that are to be mailed the following day.

3. Can be fastened to a wall, probably near an entrance.

After studying the problem, you must learn what constants and variables you have to work with. The chart below provides all information needed to design the above mentioned product.

DESIGN FACTOR CHART		
FACTORS	LIMITATIONS	VARIABLES
Length	9" at one point	--
Width	----	1½ - 4"
Thickness	3/4"	----
# of Keys Held	---	2-4 sets
Method of Hanging Keys from Device	L hooks	----
# of Letters Held	---	2-5
Method of Holding Letters	Saw Kerf	----
Method of hanging Device	Hole for Nail	----
Finish	---	Natural-Deft Stain-Deft

Thumbnail 1

Thumbnail 2

Thumbnail 3

Thumbnail 4

NOTE: The only tools needed are pencil & paper ---We've given you the paper. TRY TO GET A VARIETY OF IDEAS.

Problem: Pick two of your thumbnail sketches and sketch your best ideas in the space below. The grids are 1" apart. Include all dimensions needed to layout the design on a piece of wood.

Preliminary 1

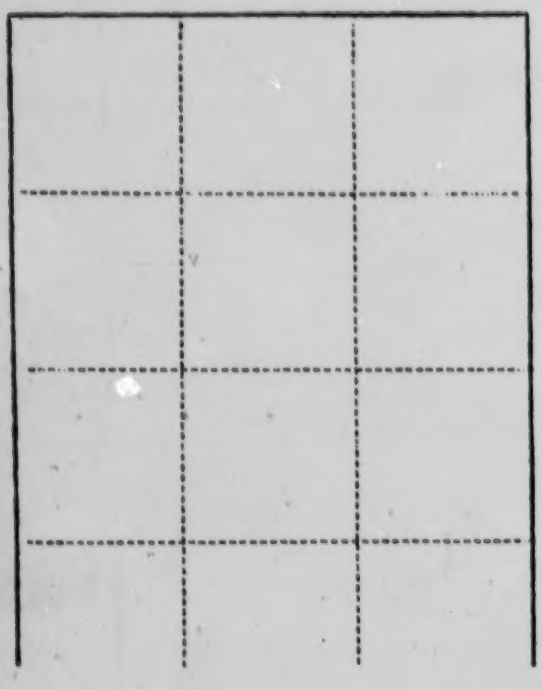

Preliminary 2

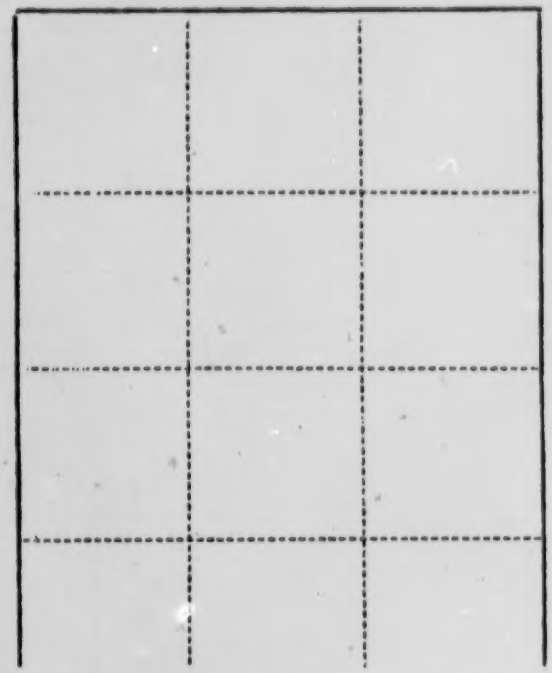

Designers Name _____ Date_____ Mods_____

Project Description:

BILL OF MATERIALS

No. of Pieces	Description and size of Part	Cost Unit	Cost Total
		Total Cost	

PRODUCTION ORDER
(PLAN OF PROCEDURE)

Step #	Operation	Machine/Tool
1		
2		
3		
4		
5		
6		
7		
8		
9		
10		
11		

(Continue on another Sheet if Needed)

ACTIVITY #5

OAK GROVE JR. HIGH SCHOOL
INDUSTRIAL EDUCATION

NAME _____
MODS _____ FOLDER NO. _____

MARKETING: FINDING AND IDENTIFYING SAMPLES OF ADVERTISING TECHNIQUES AND PROMOTIONS.

One of the first steps in selling a product is informing the Consumers the product is for sale. One way to inform people about products is through advertising. Informing a prospective Customer that a product is available will not guarantee a sale. You must encourage him to buy. Some of the Advertising "Techniques" and "Promotions" Companies use to encourage people to buy their products are listed below. LOOK THROUGH SOME OLD NEWSPAPERS, MAGAZINES, CATALOGS, ETC. FOR SAMPLES OF ADVERTISEMENTS THAT USE THE TECHNIQUES LISTED BELOW. CLIP AND ATTACH THESE SAMPLE UNDER THE APPROPRIATE ADVERTISING TECHNIQUE LISTED BELOW.

I. PROMOTIONS: THOSE ACTIVITIES EMPLOYED BY AN ENTERPRISE TO MAKE ADVERTISING EFFECTIVE.

1. INTRODUCTIONS: An announcement of the bringing into use of a product for the first time.

2. CONTESTS: A promotional technique introducing the element of Chance or Competition.

3. DISCOUNTS: The offering of reduced prices on items by a seller.

4. PREMIUMS: An added inducement to purchase by adding a (free) gift in the deal.

5. EXHIBIT: A display put on by a producer, association, or middleman in which products are shown or demonstrated to the Consumer.

6. BRAND NAME: Promotion of a product based upon a well-known or reputable name.

FINDING AND IDENTIFYING
SAMPLES OF ADVERTISING
TECHNIQUES AND PROMOTIONS

NAME _____
MODS _____ FOLDER NO. _____

II. Those means of advertising which are employed to advertising techniques: PRODUCE A PSYCHOLOGICAL COMPETITIVE ADVANTAGE.

1. NAME CALLING: The techniques used to give a "bad name" to those products marketed by a competitor.

2. GLITTERING GENERALITIES: A popularly held technique used to make people except and approve a product without close examination.

3. PLAIN FOLKS: A technique wherein the advertiser attempts to speak at the consumer's level.

4. TESTIMONIAL: A technique used to induce the consumer to accept a product based on the endorsement of a prestige figure.

5. CARD STACKING: Exaggerating the advantages of a product as opposed to the weakness of a competitive product.

6. BAND WAGON: A technique used to induce the customer to follow the crowd in the purchase of goods or services.

7. COMPARISON: A technique in which two or more products are constrasted or paralleled.

ACTIVITY #6

MARKET SURVEY

NAME _____
MODS _____ FOLDER NO. _____

Market surveys are taken to find out how much consumer demand there is for a particular product. This helps companies to determine if their product will sell.

You are to conduct a consumer survey, tabulate data from the survey, complete a market research report, and use the report to answer questions about consumer demand for your newly designed Prototype.

FOLLOW THESE STEPS: READ ALL STEPS BEFORE STARTING

1. Look over the CONSUMER SURVEY FORM and become familiar with the questions you will be asking.

2. The product you will be using for the survey is your PROTOTYPE. YOU CAN NOT TAKE THIS MARKET SURVEY UNTIL YOUR PROTOTYPE IS COMPLETED - YOU WILL NEED TO SHOW THE PROTOTYPE AS YOU ASK THE QUESTIONS!

3. Throughout the school, ask people the questions on the Consumer Survey Form. Relate the questions to your prototype and let the people examine your prototype as you complete the questions. (SURVEY A MINIMUM OF 10 PEOPLE).

4. Make sure you keep track of the responses for each question from each person you survey. (THIS CAN BE DONE ON YOUR CONSUMER SURVEY FORM BY PUTTING AN (X) BEHIND THE RESPONSE GIVEN TO EACH QUESTION BY EACH PERSON).

5. Once you have questioned all the people you plan to survey, complete the market Research report by filling in statements 1-13 on the back side of your Consumer Survey Forms.
(NOTE: THE MORE PEOPLE YOU SURVEY THE MORE ACCURATE YOUR SURVEY WILL BE).

6. Use the Data from your report to answer the questions on the back of this sheet.

RESULTS OF MARKET SURVEY

NAME _____
MODS _____ FOLDER NO. _____

After you have completed your survey and filled in the Market Research Report, use the data gathered in the Report to answer these questions.

1. What group of people would make the best market for the product? (See Items 1 and 2 on Market Research Report)

2. What is the potential market for the Product? (See Items 3, 8, 11, 12, 13)

3. Can a trend in sales be determined from the data provided? (See Items 3, 4, 5, 6)

4. Is there any indication that the Consumer will prefer your product over others on the market? (See Items 4, 5, 6, 7, 10)

5. How will competition affect your product? (See Items 4, 5, 6, 7, 10)

6. What percentage of the total market can we expect? (See Items 4, 5, 6, 7, 10)

7. Assume that we need to sell a minimum of 30 units, at $ .60 each to make a profit, will business Volume be large enough to return a profit? (See Items 9, 10, 11, 12, 13)

ACTIVITY #7

OAK GROVE JR. HIGH SCHOOL
INDUSTRIAL EDUCATION
GETTING A JOB

NAME _____
MODS _____ FOLDER NO. _____

RATIONAL: Most people have a job sometime during their life. Because many people are often competing for the same job, it is to your advantage to know HOW TO APPLY FOR A JOB. This unit will give you background useful in your future job hunts, as well as a job with OAK GROVE ENTERPRISE.

REQUIRED:

- Attend Large Group Lecture and Complete Study Guide.
- Read "OAK GROVE ENTERPRISES WANT ADS."
- Complete Resume
- Sign-Up For a Job Interview.

OVERTIME OPTIONS: Listed below are the overtime options and the amount of INDUSTRIAL DOLLARS possible for each activity.

- Design an Ad that could be put in a Newspaper to be used in hiring people for a Key Holder Company $1.00

- Role Play: You are the Director of Personnel for a Key Holder Company. List 10 Good questions you would ask a person trying to get a job running a Jig Saw with your company. $1.00

OAK GROVE JR. HIGH SCHOOL
INDUSTRIAL EDUCATION
STUDY GUIDE: GETTING A JOB

NAME _____
MODS _____ FOLDER NO. ____

Perhaps the most important job you ever get will be _____.

In your first job you will have a boss, specific _____, regular working hours.

You should be able to read, write, do simple math, and handle _____ _____.

The most helpful thing to meeting job requirements is a _____.

Chances are strong that you won't get the _____ job you apply for.

Most job openings are for _____ people.

Plan a _____ job hunting plan.

One way to find a job is to check _____ _____ in a newspaper.

An Information Sheet about yourself is called a _____.

The first days or weeks at work you may be _____ or _____.

You should use your spare moments to show your own initiative.

- Study the new employees _____
  Observe customs and traditions.
  Take your cues from _____

It may take time to make _____ on the job _____ don't force things

Even if you were a star in school, try to be a little humble on your new job. Don't act _____.

When you make a mistake be willing to accept _____.

Employers expect a full days _____ for a full days _____.

OAK GROVE

OAK GROVE'S INDUSTRIAL ARTS CLASSIFIED WANT ADS

JUNIOR HIGH

HELP WANTED

PUZZEL INSPECTOR. Opening on Day shift. Experience desired, but will train the right person. Friendly working conditions. For confidential interview apply in person. OAK GROVE ENTERPRISES. Bloomington, Minnesota

EXACTO & JIG OPERATOR

IMMEDIATE FULL TIME position for (2) people in our Packaging and Assembly Department. Trim clear formed plastic. Experience helpful, not essential. Will train the right people. Grow with an expanding new company. For more information and personal interview apply in person at: OAK GROVE ENTERPRISES. Bloomington, Minnesota

PACKAGING & ASSEMBLY

PROMINENT COMPANY LOOKING FOR (1) individual to work in our packaging and assembly department. FINAL PACKAGE ASSEMBLY: Top cardboard, clean plastic, instruction book. We are waiting for YOU. Apply in person OAK GROVE ENTERPRISES, BLOOMINGTON, MINNESOTA

****

PERSONALS

John Small is a TEENAGER TODAY
(4-19-74) GOOD LUCK.

MOM & DAD

REWARD FOR THE RETURN of 14 yr. old German Shep.
Deeply missed.

Call 831-1789
Bloomington Tag. No. 14444307

FOR SALE

1 used tricycle, slightly busted, one pedal missing, good rubber. Best offer takes. Still on warranty. Call after 6:00 p.m. 884-3678

1 car in fairly good shape. Part Ford and part Chev. 2 wheels missing - Will take best offer. Call 444-000.

HELP WANTED - HELP WANTED

STAPLERS

OAK GROVE ENTERPRISES has 2 openings for individuals on a new product line. Come apply, STAPLE your way to success. Apply in person at our personnel office. 494 & West 106th St., Bloomington, Minnesota

ASSEMBLY * ASSEMBLY * ASSEMBLY

Little or no experience needed. (1) individual to punch holes in the final operation of our great wood puzzles. Contact Personnel. OAK GROVE ENTERPRISES, BLOOMINGTON, MINNESOTA, West 106th St.

SUPER PROFIT EMPLOYMENT OPPORTUNITY

* FIRST TIME OFFERED
* EXCLUSIVE PRODUCTS
* YOU'LL RECOGNIZE THEM IMMED.

We have an opening for a qualified person in our stack and store dept. Challenging job for the right person. Apply for interview. OAK GROVE ENTERPRISES. 494 West 106th St., Bloomington, Minnesota

HELP WANTED

SILK SCREEN OPERATORS

Young, growing company has openings for (4) Silk Screen Operators. Print Co. Emblem on Wood Surface. Experience helpful, for more information contact Personnel Office. OAK GROVE ENTERPRISE, BLOOMINGTON, MINNESOTA

"PRESSMAN"

We are looking for a Platten Press Printer for our Puzzle Company. Excellent opportunity for the "RIGHT" person. Apply in person. OAK GROVE ENTERPRISES. Bloomington, Minnesota

SERVICE MANUAL PRODUCTION

SILK SCREEN PRESS OPERATORS - Experienced Preferred. (4) openings for qualified Silk Screen Press Operators. Will train. Apply in person. OAK GROVE ENTERPRISES. 1494 W. 106th St., Bloomington, Minnesota

HAND FOLDER

TOP WAGES - FOLD Mimeograph Pages for our very large advertising department. No experience. Apply in person. OAK GROVE ENTERPRISES. West 106th St.

A SWINGING COMPANY NEEDS YOU. Must have sharp eyes. Chance to advance. Our Advertising Department needs STAPLERS We are one of the largest Wood Co., in the world. OAK GROVE ENTERPRISES. BLOOMINGTON, MINNESOTA. Apply in person.

OAK GROVE ENTERPRISES WOOD PUZZLES - KNOWN THE WORLD OVER., needs a PROFESSIONAL PAPER CUTTER. Must be experienced. 35W & 106th St., Bloomington, Minnesota

OAK GROVE ENTERPRISES needs you. Chance of a life time as an inspector. Need young person in a growing company. Contact Personnel. 494 & 106th St., Bloomington, Minnesota

TRAINEE. Learn the Silk Screen Printing trade. (4) openings for alert individuals seeking a new trade in the industry. Apply in person. OAK GROVE ENTERPRISES. Bloomington, Minnesota

(2) ALERT PEOPLE needed for exacto knife and jig operations in our large wood shop. Experience preferred. Apply in person. OAK GROVE ENTERPRISES. W. 106th St., Bloomington, Minnesota

CUTTER

Individual wanted to run paper cutter for Thermoformer. No experience necessary. Must be alert. APPLY IN PERSON. OAK GROVE ENTERPRISES. 494 & 106th St., Bloomington, Minnesota

ASSEMBLY

Work with wood in our very famous PUZZLE SHOP. Assemble finished products. Grow with an expanding new company. For more information and personal interview apply in person at: OAK GROVE ENTERPRISES. 1494 West 106th St., Bloomington, Minnesota

HELP WANTED

THERMOFORMING PRESS OPERATOR. (1) position available. Excellent opportunity for the right person to advance as the company expands. Apply in person. OAK GROVE ENTERPRISES. BLOOMINGTON, MINNESOTA

OAK GROVE ENTERPRISES

Immediate openings exist for (3) individuals with experience on Radial Arm Saws. Challenging job for the right person. Apply for interview: OAK GROVE ENTERPRISES, BLOOMINGTON, MINNESOTA

**** PUZZEL INSPECTOR ****

Person with excellent eyesight to inspect size - squareness for growing company. OAK GROVE ENTERPRISES. BLOOMINGTON, MINNESOTA

DRILL PRESS OPERATORS

Full time positions available for 4 individuals. Experience helpful will train, for more information contact Personnel Office. OAK GROVE ENTERPRISES. Bloomington, Minnesota

NEEDED:

Two (2) alert individuals to operate Band Saw. Experience helpful. Contact OAK GROVE ENTERPRISES. Bloomington, Minnesota

PUZZLES

TEMPORARY EMPLOYMENT in Wood Working Lab. We need three (3) good people for our dowel installation department. No phone calls. Bloomington area. OAK GROVE ENTERPRISES.

WOOD WELDERS

Wood Lab. Experience preferred. Apply in person. OAK GROVE ENTERPRISES. BLOOMINGTON, MINNESOTA

HELP WANTED

SANDER

Immediate position available for Belt Sander in Wood Lab. OAK GROVE ENTERPRISES. Bloomington, Minnesota

INDUSTRIAL CAREER OPPORTUNITY

HAVE YOU HAD TRAINING IN MATERIALS & PROCESSES? We are the leader in wood puzzles. We are seeking people now, to meet the demands of our rapidly expanding market.

OPPORTUNITIES AVAILABLE:

3 - Finish Sanders
1 - Hole Inspector
6 - Hand Sand Surfacers
1 - Sanding Inspector

Bring your resume to your private, confidential company interview.

OAK GROVE ENTERPRISES - BLOOMINGTON, MINNESOTA

HIRING - (1) Sander Immediately. Apply dressed to work. OAK GROVE ENTERPRISES. BLOOMINGTON, MINNESOTA No Phone Calls.

SILK SCREEN PRINTING TRAINEES

Full time, immediate openings for 4 individuals with a desire to learn the silk screen printing trade. Good opportunity for ADVANCEMENT. Apply for interview at OAK GROVE ENTERPRISES. Bloomington, Minnesota, an equal opportunity employer.

LOOKING FOR: (4) FINISHERS - Large Wood Puzzel Co. No phone calls. New company with future. OAK GROVE ENTERPRISES. BLOOMINGTON, MINNESOTA

HELP WANTED

EXPERIENCED HELP NEEDED

Large suburban wood manufacturer needs one EXPERIENCED TABLE SAW OPERATOR. Apply in person.

ASSEMBLY LINE POSITIONS

Expanding manufacturing corporation needs responsible people to operate assembly line. Apply in person.
OAK GROVE ENT.

SILK SCREEN OPERATION

Responsible person to operate Silk Screen Drying operation.

Apply in person. OAK GROVE ENT.

* * * * DOWEL CUTTERS * * * *

Positions open in Dowel Assembly Dept.
Apply in person. OAK GROVE ENT.

JIG SAW OPERATORS

Two responsible people to operate

INDUSTRIAL JIG SAW OPERATION.

INTERESTED? Contact OAK GROVE ENT.

CONVEYOR BELT MACHINIST

Experienced machinist to maintain

conveyor belt system. Apply in

person.

* * * OAK GROVE ENTRANCE * * * *

MITRE BOX OPERATION

1 person to work Mitre Box Operations

in Dowel Dept. OAK GROVE ENTERPRISES.

W. 106th Street, Bloomington,

Minnesota

FINISHING TECHNICIANS

5 people needed to work in finishing

dept.: of large wood manufacturer.

Apply in person.

OAK GROVE ENTERPRISES, West 106th St.

ACTIVITY #8

OAK GROVE JR. HIGH SCHOOL
INDUSTRIAL EDUCATION

NAME _____
MODS _____ FOLDER NO. _____

MARKETING: FINDING AND IDENTIFYING SAMPLES OF ADVERTISING TECHNIQUES AND PROMOTIONS.

One of the first steps in selling a product is informing the Consumers the product is for sale. One way to inform people about products is through advertising. Informing a prospective Customer that a product is available will not guarantee a sale. You must encourage him to buy. Some of the advertising "Techniques" and "Promotions" companies use to encourage people to buy their products are listed below. LOOK THROUGH SOME OLD NEWSPAPERS, MAGAZINES, CATALOGS, ETC. FOR SAMPLES OF ADVERTISEMENTS THAT USE THE TECHNIQUES LISTED BELOW. CLIP AND ATTACH THESE SAMPLES UNDER THE APPROPRIATE ADVERTISING TECHNIQUE LISTED BELOW.

I. PROMOTIONS: THOSE ACTIVITIES EMPLOYED BY AN ENTERPRISE TO MAKE ADVERTISING EFFECTIVE.

1. INTRODUCTIONS: An announcement of the bringing into use of a product for the first time.

2. CONTESTS: A promotional technique introducing the element of Chance or Competition.

3. DISCOUNTS: The offering of reduced prices on items by a seller.

4. PREMIUMS: An added inducement to purchase by adding a (free) gift in the deal.

5. EXHIBIT: A display put on by a producer, association, or middleman in which products are shown or demonstrated to the Consumer.

6. BRAND NAME: Promotion of a product based upon a well-known or reputable name.

FINDING AND IDENTIFYING
SAMPLES OF ADVERTISING
TECHNIQUES AND PROMOTIONS

NAME _____
MODS _____ FOLDER NO. _____

II. Those means of advertising which are employed to advertising techniques: PRODUCE A PSYCHOLOGICAL COMPETITIVE ADVANTAGE.

1. NAME CALLING: The techniques used to give a "bad name" to those products marketed by a competitor.

2. GLITTERING GENERALITIES: A popularly held technique used to make people except and approve a product without close examination.

3. PLAIN FOLKS: A technique wherein the advertiser attempts to speak at the consumer's level.

4. TESTIMONIAL: A technique used to induce the consumer to accept a product based on the endorsement of a prestige figure.

5. CARD STACKING: Exaggerating the advantages of a product as opposed to the weakness of a competitive product.

6. BAND WAGON: A technique used to induce the customer to follow the crowd in the purchase of goods or services.

7. COMPARISON: A technique in which two or more products are contrasted or paralleled.

ACTIVITY #9

NAME _____
MODS _____ FOLDER NO. _____

TRADEMARKS & COMPANY NAMES

REQUIRED WORK:

You are a member of a team that creates designs for companies (image makers). Your agency has been given the task of designing trademarks and company names for four different companies.

Remember that a trademark is a symbol that makes it easy for the public to identify the company. The company name should reflect the products or services offered by the company. (Pages 3-6)

COMPANY OVERTIME OPTIONS (Page 2)

Create a company name and design a trademark for your company.

PAYMENT - Up to 2 INDUSTRIAL DOLLARS.

NAME _____
MOD _____ FOLDER NO. _____

Create a company name and design a trademark for your company.

1. Company Name _____

2. Trademark (Sketch Design Below)

NAME _____
MOD _____ FOLDER NO. _____

Recording Company - Makes records and tapes for popular songs.

Company Name _____

Trademark (Sketch Design Below)

NAME _____
MODS _____ FOLDER NO. _____

Motorcycle Company - Sells and services motorcycles.

Company Name _____

Trademark (Sketch Design Below)

NAME _____
MODS _____ FOLDER NO. _____

Bicycle Manufacturer - Produces racing bikes.

Company Name _____

Trademark (Sketch Design Below)

NAME _____
MODS _____ FOLDER NO. _____

Water Softener Service Co. - Rents water softeners to home owners.

Company Name _____

Trademark (Sketch Design Below)

Learning Activity 2
PACKAGING PROBLEMS

1. Packaging accounts for _____ of the total U.S. production of paper.

2. The process of thermoforming a plastic container to a shape slightly larger than the product to be packaged is called:

   _____ _____.

3. The process of shaping a plastic film over the product itself and pulling the plastic to a tight fit is called _____

   _____.

4. A metal container in which the contents are held under pressure and released in small quantities by means of a valve is called:

   _____ _____.

5. Many frozen foods are now packaged in soft _____

   _____ that can be dropped into water to cook.

6. A good package will do 5 different things. List them:

   a.

   b.

   c.

   d.

   e.

7. If your company is producing "Sky Blue Water" what would you choose as a packaging material and why?

8. If you were producing "space food" that must be kept air tight or spoil, what would you consider as a packaging material and why?

OAK GROVE JR. HIGH SCHOOL
INDUSTRIAL EDUCATION

NAME _____
MODS _____ FOLDER NO. _____

PACKAGING YOUR PROTOTYPE
(Learning Activity #3)

After completing the programmed Unit and the Packaging problems (Activities #1 and #2 in this packet) you should be ready to use some of the things you have learned to design a Package for your PROTOTYPE.

TO COMPLETE THIS ASSIGNMENT FOLLOW THESE STEPS:

1. DESIGN FACTORS: Look over Design Factors Chart (BACKSIDE OF THIS PAGE) for ideas to consider.

2. DESIGN PACKAGE: Make thumbnail sketches of several ideas (USE SPACE AT BOTTOM OF PAGE); Pick one and make a full size sketch of the package (USE NEXT PAGE); Use drafting equipment to make the accurate drawing of package which can be used as a template to make package later (SEPARATE SHEET).

3. ENGINEERING DETAILS: Determine what materials, tools and equipment, and printing processes will be needed to Mass Produce the Package. THEN FILL IN ON THE SHEET PROVIDED.

4. APPROVAL: Have your Package Design approved by your instructor.

5. BUILD PROTOTYPE OF PACKAGE: Custom build one package for your Prototype. (Try to make it look as close as possible to what a mass produced package would look). DO NOT USE THE ACTUAL PRINTING PROCESSES - BUT HANDLETTER (templets, lettering guides, drafting, equipment, etc.) AND COLOR THE PACKAGE.

THUMBNAIL SKETCHES BELOW:

PACKAGING DESIGN FACTORS

I. PROTECT PRODUCTS

1. ROUGH HANDLING
- Type of Packaging Material (plastic, glass, wood, metal, cardboard)
- More than one container used (inside and outside package)
- Packaged strengthened (ribs, beads, grooves, bends, folds)
- Cushioning (paper, cardboard spacer, saw dust, foamed plastic)

2. MOISTURE
- Scaled
- Foil Wrapped
- Wax, oil, or paint coating
- Silica gel.

3. HEAT AND COLD
- Foamed plastic insulation
- Metal foils
- Several layers of material

4. CONTAMINATION
- Completely enclosed
- Sealed against - air, dust, moisture

5. LOSS
- How is package closed?
- Likely to come open?

II. IDENTIFY & PROMOTE PRODUCT

1. MANUFACTURING IDENTIFIED
- Company name
- Brand name
- Trademark
- Location of Manufacturer

2. DESCRIPTION OF PRODUCT
- Catalog No.
- Color, flavor, size, ingredients, etc.

3. DIRECTIONS
- How to open
- How to use
- Safety or first aid (example: "Poison" Caution)
- Special Handling or storage (example: This end up, fragile, keep from freezing)

4. QUANTITY OF PRODUCT
- No. of units
- Weight or Volume

5. SERVICE INFORMATION
- Gaurantee
- Inspection Slip
- List of servicing addresses
- Approval a ratings (example: Good House-keeping, Underwriters U. L.)

6. ENCOURAGE CONSUMER TO BUY
- Package used for display
- Colorful and appealing package
- Priced clearly
- Discounted or special promotion
- Coupons enclosed

III. AID HANDLING AND STORAGE OF PRODUCT

1. SHAPE OF PACKAGE
- Standard Size
- Stacking

2. PACKAGE SUPPORT WEIGHT

3. COMPACT

4. HANDLES OR SLOTS FOR GRASPING

5. REUSABLE PACKAGE

6. PACKAGE AIDS IN USE OF PRODUCT (example: Razor Blades)

PACKAGING

NAME _____
MODS _____ FOLDER NO. _____
APPROVAL _____ DATE _____

MATERIALS NEEDED FOR PACKAGE

QUANTITY	TYPE OF MATERIAL, SIZE, COLOR, ETC.	ESTIMATE OF COST (PER PACKAGE)
	TOTAL	

TOOLS & EQUIPMENT NEEDED TO MASS PRODUCE PACKAGE

QUANTITY	NAME OF TOOL OR EQUIPMENT	USED TO:

PRINTING PROCESSES TO BE USED

PRINTING PROCESS	USED TO:

145

DRAW FULL SIZE SKETCH OF PACKAGE

APPROVAL _____

DATE _____

NAME _____

MODS _____ FOLDER NO. _____

146

ACTIVITY #10

Programed Unit

FRAME 1

Modern packaging must meet consumer demands for freshness, cleanliness, and convenience. From that definition you could find 5 distinct functions. A Package must:

1. Provide a container for the product
2. Protect the contents
3. Identify the product
4. Display and sell the product
5. Make it easy to use the product

* * * * * *

Largely because of the growth of self-service stores, the

(1) _____ of a product has become very important.

FIND THE ANSWER IN FRAME 4

FRAME 2

When picking a packaging material, be sure it will serve as a good container for the product. Liquids would not work very well in a plastic bag, and the glass jars would probably break if used for frozen foods.

* * * * * *

The first thing to consider when choosing packaging material,

is that it makes a good (2) _____ for the product.

FIND THE ANSWER IN FRAME 5

FRAME 3

The next most important need is to protect the product. A glass container, such as a drinking glass, would hold soda. However breakage could happen easily when the pop is being shipped or carried home. Therefore, sealed cans or heavy glass bottles are the answer.

* * * * * *

The second important packaging is to _____

the product.

FIND THE ANSWER IN FRAME 6

FRAME 4

THE ANSWER IS: packaging

If you got it right go to FRAME 2

FRAME 5

THE ANSWER SHOULD BE: container

Correct? Go to FRAME 3

FRAME 6

YOU SHOULD HAVE: protect

If right go to FRAME 7

FRAME 7

The government is asking that companies properly identify the product. Expensive fines result from improper labeling and packaging. Company brand and trademark should be noticeable so advertising done on TV and in magazines can aid the sales.

Move on to FRAME 8

FRAME 8

Consider the number of products on store shelves. Each competes for the customer's dollar. You can see that a bright, colorful package is a powerful selling tool . . it convinces the retailer to stock the product and persuades the consumer to but. This is called merchandising a product.

* * * * * *

The art of displaying and selling the product can make or break a company. This is called (8) _____ a product.

FIND THE ANSWER IN FRAME 9

FRAME 9

THE ANSWER IS: merchandising

Get it right? Go to FRAME 10

FRAME 10

There are many packages that make it easy to use a product. Examples are Kleenex, with a pop up feature; shoe polish kits that contain a dauber and polishing cloth; and soft drinks in self opening cans. Recent developments include spray on bandages and cook-in-bag foods.

* * * * * *

Many times a manufacturer will design a package that will make the product (10) _____ _____.

SEE FRAME 13 FOR ANSWER

FRAME 11

There are many different materials used in packaging. Half of the total United States production of paper is used in packaging. Grocery bags, shipping sacks, butter wrappers, frozen food wrappers, soap containers, and lightweight paper for delicate items. Paper comes in so many varieties that it can be adapted to almost any situation, except for liquids and products requiring a completely air-tight package.

* * * * * *

Packaging is the most important use for (11) _____.

SEE ANSWER IN FRAME 12

FRAME 12

Metals are most often used in the packaging of liquids and processed fruits and vegetables. Metal cans have been used often, but other applications for pouches, semi-rigid containers for frozen cakes, TV dinners, and frozen pies are used a great deal. Because aluminum can withstand heat and cold, easy to store, tasteless, odorless, non-toxic, and hygienic, it can be used as a safe packaging material.

* * * * * *

One of the most often used materials in packaging is (12) _____.

SEE FRAME 15 FOR ANSWER

FRAME 13

THE ANSWER IS: easy to use

Right? Go to FRAME 11

FRAME 14

YOU SHOULD HAVE: paper

If OK, go to FRAME 12

FRAME 15

THE CORRECT ANSWER IS: metal

Correct? Go to FRAME 16

FRAME 16

A metal container in which the contents are held under pressure and released in small amounts by means of a valve is called an aerosol can. Once used chiefly for insecticides, it now is a popular method of packaging colognes, hair sprays, and many food products. In addition, new trends, such as self-heating aerosol shave cream and miniature aerosol mouthwash have picked up in recent years.

* * * * * *

Recent additions to the packaging field find foods such as cheese, being served from (16) _____ cans.

FIND THE ANSWER IN FRAME 18

FRAME 17

When a rigid container with the contents visible is needed, glass is a possible choice. Although many former glass packaged have been replaced by plastic, glass is still used where elegant packaging is desired.

* * * * * *

Although glass packages are nice looking, they are being used less. The big problem with glass is that it (17) _____.

ANSWER IS IN FRAME 19

FRAME 18

THE ANSWER IS: aerosol

OK? Go on to FRAME 17

FRAME 19

YOU SHOULD HAVE: breaks

Now go to FRAME 20

FRAME 20

Plastic is fast becoming the foremost packaging material, it can be used in almost every packaging need. The reason every one isn't using it is the cost of equipment to change over. Plastic can be divided into two types: rigid and flexible. Rigid types are used in ice cream and margarine containers. Flexible types are bags, wraps, pouches, and tubes.

* * * * * *

Cream would probably be packaged in (20) _____ plastic containers.

SEE FRAME 22 FOR ANSWER

FRAME 21

There are many flexible plastic packages being developed. The blister pack is plastic that is molded into a shape slightly larger than the product through a thermoforming process.

Skin packs are similar to blister packs, except in this case the plastic film is shaped right over the product itself, rater than being premolded.

The shrink pack makes use of a special plastic film that is wrapped over the product and then exposed to hot air. This method can be used in odd-shaped packages like hams and cheeses.

Plastic boiling pouches allow frozen foods to be dropped into boiling water to cook the product. Another use is the roast-in bag feature that keeps ovens clean.

* * * * * *

List three different flexible plastic packages being used a great deal today.

a.

b.

c.

SEE FRAME 23 FOR THE ANSWER

FRAME 22

THE ANSWER SHOULD BE: rigid

OK? Go to FRAME 21

FRAME 23

YOU SHOULD HAVE THE FOLLOWING 3 IN ANY ORDER:

a. Skin Pack

b. Shrink Pack

c. Plastic boiling pouch

Now go to FRAME 24

FRAME 24

In 1966 the Federal Food and Drug Administration stated rules for the packaging of foods, drugs, and cosmetics. The Federal Trade Commission has laws that cover most other goods. Packages with false bottoms, and other devices used to make the container look bigger are outlawed. Labeling regulations and size of print are also stated. Phrases such as "jumbo quart" and "full gallon" are prohibited.

Go to FRAME 25

FRAME 25

When designing a package, consider:

____ What material will be used?
____ How will it be sealed?
____ Will it hold up under the handling it will get?
____ Is the label design effective?
____ Does it conform to Government regulations?
____ Can the product name be seen easily?
____ Will it make a good impression on the consumer?
____ Will it show up well on TV?

TURN THE PAGE AND TAKE THE SELF TEST!

ACTIVITY #11

I - VII - 9

Name _____
School _____
Date _____

PACKAGING CHECK LIST

1. Product name _____

2. Package is designed to protect _____; provide sales appeal _____

3. Person responsible for final "ok" of package _____

4. Date packages must be available _____

5. Quantity of packages required _____

6. Physical form of product:

Liquid _____ Comment _____

Solid _____ Comment _____

Gas _____ Comment _____

Other _____ Comment _____

_____

7. Characteristics of product:

Fragile _____ Volitile _____

Sticky _____ Abrasive _____

Lumpy _____ Other _____

Toxic _____ _____

8. Protection required:

Temperature _____ Explain _____

Moisture _____ Explain _____

Light _____ Explain _____

Mold _____ Explain _____

Rodents or insects _____ Explain _____

Corresion _____ Explain _____

Petroleum Products _____ Explain _____

Odors _____ Explain _____

Others _____

_____

_____

9. What features will be required for handling, shipping, or storing?

_____

_____

_____

SALES APPEAL

10. Approximate age of potential customer _____
11. Approximate income level _____
12. Type of selling involved (door-to-door, sales outlets, etc.) _____

_____

13. What sales appeal will best communicate with the customer? _____

_____

14. Will packages be used as part of a display? _____
15. Is safety a factor when the customer is handling the package? _____

    Explain _____
16. Can the empty package be re-used? _____
17. What material will the package be made from? _____
18. Will the package be decorated? How and with what? _____

_____

19. Will the material accept the decorating? _____

FINAL CONSIDERATIONS

20. Has minimum material been used in making the package? _____

21. Are the weight and size economical for the shipper? _____

22. Have the design specifications been detailed? (Drawings, etc.) _____

_____

23. Do you have a source of supply for your materials? _____

NOTE: Drawings, sketches, and other related information should be attached to this form.

24. Additional comments: _____

_____

_____

_____

_____

_____

_____

ACTIVITY #12

BY-LAWS OF

_____

Article I -Name and Membership

1. The name of the company shall be _____, a manufacturing company.
2. Membership in this company shall be unrestricted.
3. Any member may be dropped from membership for cause by a two-thirds vote of the Board of Directors, upon recommendation of an officer.

Article II - Stockholders

1. This company is owned by its stockholders, who may vote, either in person or by proxy, at all meetings of stockholders. Stockholders are entitled to one vote for each share of stock held.
2. Meetings of stockholders may be called by resolution of the Board of Directors.
3. A quorum at any meeting of stockholders shall consist of one-half of the outstanding stock of the company, represented either in person or by proxy. A majority shall decide any question that may come before the meeting.
4. Members claiming proxy votes must have stocks in their possession.
5. Stockholders meetings may be called by stockholders if a quorum of 50% request the meeting.

Article III - Board of Directors

1. The control of this company's business and affairs shall be vested in a Board of Directors, consisting of the membership of the company. Anyone dropped from membership is also dropped from the Board.
2. Meetings shall be called by the President when needed.
3. A quorum shall consist of at least one-half of the Board.
4. The order of business at directors' meetings shall be:
   a. Record of attendance.
   b. Reading of the minutes.
   c. Reports of officers and committees.
   d. Unfinished business.
   e. New business.
   f. Adjournment.
5. The duties of the Board of Directors shall include, but not be limited to, electing and removing company officers, setting policy to safeguard the stockholders' investment and to further the growth of the company, requiring reports of officers and department heads, establishing dividend payments, and determing the disposition of surplus.

Article IV - Officers

1. Officers of the company shall be appointed for the duration of the company.

2. The appointed officers of the company shall be a President, Vice-President of Production, Vice-president of Non-production, and Financial Manager. The Board of Directors may designate other appointive management positions such as Corporative Secretary, Safety Engineer, Quality Control, etc.

3. The President and Vice-presidents shall hold office until the company's dissolution, or a successor is appointed.

4. An elected officer may be removed from office at any regular meeting of the Board of Directors by a two-thirds vote of the Board.

5. The President shall have the power to call meetings pertaining to management and/or company business.

Article V - Duties of Officers

1. President - shall be the chief executive officer. He shall preside at all meetings, appoint members to such management positions as may be needed, and have general supervision of the company. He shall have authority to sign chicks, stock certificates, and other official documents. He shall report to the Board of Directors and the stockholders.

2. Vice-president of Production - shall plan, prepare and oversee the production program of the company. He shall be the manufacturing officer, training, assigning, and supervising all members in their materials and shall act as requistioning agent for production. He may appoint such assistants as he may need. He shall report to the President and the Board of Directors.

3. Vice-President of Non-Production - shall assume the duties of the President in his absence. He shall plan, prepare, and oversee the research and development of new products and improvements in old products according to consumer demands. He shall also be responsible for the sales program of the company. He may appoint assistants as he needs them. He shall report to the President and the Board of Directors.

4. Finance Manager - shall have custody of all monies of the company. He shall maintain a checking account, and shall have the authority to write and sign checks. He shall keep the records prescribed. He shall report to the President and to the Board of Directors. He must work together with management in the financial affairs of the company.

5. Personnel - shall assist department heads in securing and maintaining an efficient work force. Personnel must go through Vice-Presidents before changing assignments made by the department heads or line foremen. Personnel shall inform department heads of the work force available. Personnel shall be responsible for maintaining time cards, employment records, job applications, and organizational chart. They are responsible for preparation of job descriptions.

6. Materials Management - is responsible for procurement of materials, component parts, supplies, tools, machinery, and office equipment.

7. Secretary - shall be corporate secretary and responsible to the President. His chief responsibility shall be to organize and prepare the corporate report for distribution to members.

Article VI - Corporate Report -

1. The report shall include:

   a. General objectives
   b. Policies of the Company
   c. Articles of Incorporation
   d. By-laws
   e. Copy of stock certificate
   f. Organization chart
   g. Job descriptions for management, department heads, and line foremen
   h. Market survey and analysis
   i. Materials list
   j. Materials requisition
   k. Purchase orders and memos
   l. Network analysis chart
   m. All drawings
   n. Route charts
   o. Flow charts
   p. All contoller's reports and liquidation

2. Management, department heads and line foremen will submit summary of activities for the corporate report by _____
   The report shall be ready for distribution by _____

ACTIVITY #13

COMMUNICATIONS DIAGRAM

FOR

ACTIVITY #1

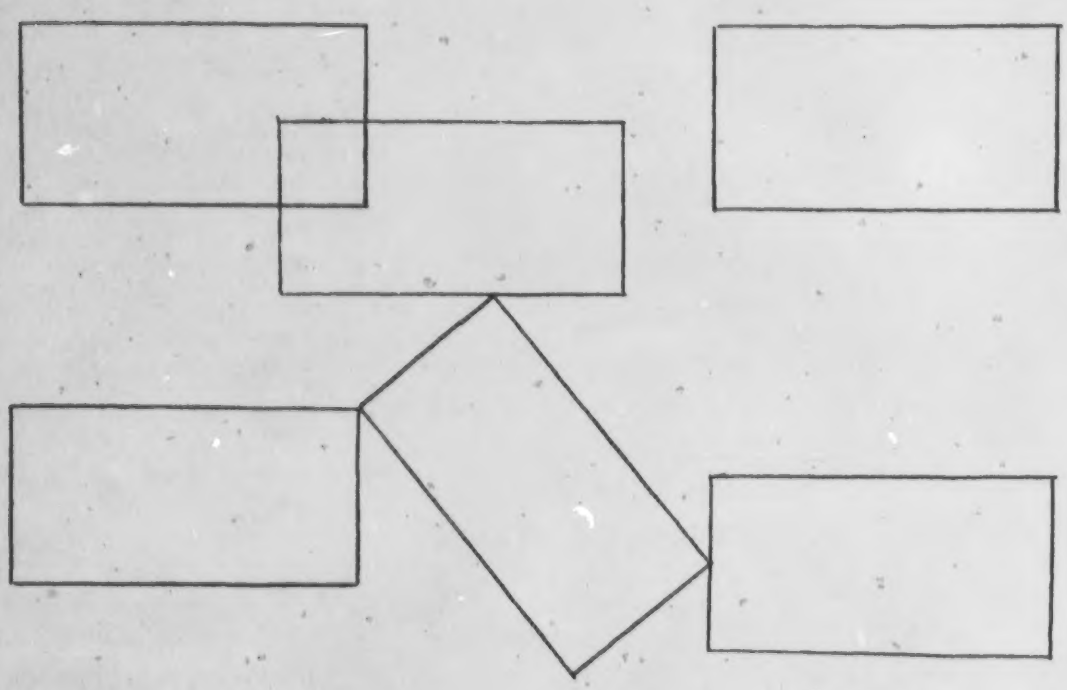

Instructions: You are to communicate the above diagram to your partner. Do not tell them the shape and any other descriptive features about the diagram. You may tell them to draw lines to the right or left, start a line half way down, or tell them to draw the line one inch long.

ACTIVITY #14

During this activity you will be able to determine the importance of accurate communications between two people and make comparisons regarding the sender and receiver.

The class should pair off. Give one person in each pair a copy of the drawing with instructions. They must communicate how to draw the diagram without giving descriptive information or shapes. For example, they may say, draw a line to the right about 2 inches long, now go down from that point 1 inch, etc. until they have communicated the entire drawing.

When finished complete the following:

1. Does the receiver's diagram look like the sender's diagram? If no, what is different?

2. Were the sender's directions accurate? If no, why not?

3. Were the receiver's interpretation accurate? If no, why not?

4. How could communications have been improved in this problem?

5. Why is communications important?

ACTIVITY #15

During this activity you will be able to determine the importance of accurate communications by describing items.

The class should be divided into groups of two. One person in each group should be blindfolded. The second person in each group should select three items found in the shop and describe the items to the blindfolded person. Do not tell them what the item is but give a description of the items. The blindfolded person should try to guess what the items are as they are described.

When finished complete the following:

1. Did the sender give accurate descriptions? If no, what was wrong with his descriptions?

2. Did the receiver have a hard time interpreting the sender's description? If so, why?

3. How could communications have been improved? Give examples of how the items could have been better described.

4. Explain the importance of the sender's descriptions and the receiver's ability to interpret.

ACTIVITY #16

COMMUNICATIONS

During this activity you will attempt to identify the communication vehicle being used to transmit the message.

Below you will find listed several types of communication media which are used to send messages. You are to identify the carrier of the message in each case. Remember the carrier is the vehicle which permits the message to get from the sender to the receiver.

_____ 1. Public address system

_____ 2. Poster

_____ 3. Radio

_____ 4. Book

_____ 5. Thermometer

_____ 6. Television

_____ 7. Flags

_____ 8. Megaphone

_____ 9. Written word

_____ 10. Bubble in carpenter's level

A. Solid
B. Fluid
C. Electrical
D. Electromagnetic

ACTIVITY #17

During this activity you will try to interpret the messages being sent by different means.

1. — . — . . — — . — . — — — — — . . —

. — . . . — — . . — . . . .

INTERPRETATION: _____

2.

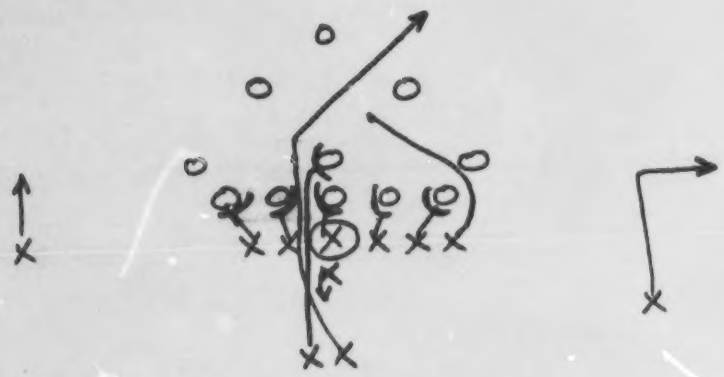

Interpretation: _____

3. SYMBOLS YOU MIGHT FIND ON AN ELECTRICAL DRAWING.

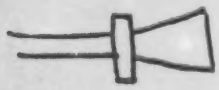

A. _____

B. _____

S_2

C. _____

D. _____

E. _____

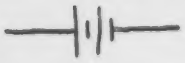

F. _____

4. You are in a restaurant and hear the following: "One BLTOT."

   Interpretation: _____

5. Picture of referee's signals.

   Interpretation: _____

6. Shorthand symbols.

   Interpretation: _____

ACTIVITY #18

During this activity you will be become better acquainted with communication interference.

Communication interference is something which reduces the effectiveness of the message, makes it difficult for you the receiver to get the message.

It may be in the form of electromagnetic interference(wave is partial or entirely blocked from passing through the air), mechanical interference (noise made mechanically which reduces the message), electrical interference (wire circuit is blocked or disturbed), and behavioral interference (do to human characteristics or personalities the message cannot be received or sent properly).

In each of the following situations which form of communication interference is keeping the receiver from getting the message or the sender from sending the message.

_____1. Static on the radio.

_____2. Beating a drum while you read.

_____3. Language barrier.

_____4. Short circuit in telephone wire.

_____5. Machines running.

_____6. Extension cord on microphone gets unplugged.

_____7. Electrical storm causes interference on television.

_____8. Audience falls asleep.

A. Electromagnetic
B. Mechanical
C. Electrical
D. Behavioral

1. As you looked at the various messages which were being sent by symbols, did you find it difficult to interpret the message? Why?

2. Which one was most difficult to interpret? Why?

3. What would have aided you to better understand the messages?

4. Would having communications skills similiar to the sender have helped you interpret the messages? If so, how?

ACTIVITY #19

During this activity you will learn about communication interference.

Teacher preparation:

Prepare a short test on audio tape to be played to the class. State the directions first and proceed with reading the questions. Tell them that each question will only be repeated once. During the taping have a variety of different sounds and noises in the background which will interfere with the class receiving the questions.

After they have finished taking the test discuss the problems they had and relate to communications interference.

ACTIVITY #20

During this activity you will be doing product research to determine which one of several products might be produced by your student enterprise.

As a class brainstorm with your instructor some product ideas which might be made in the shop. Each member could be assigned to bring in one idea. Make a list of these ideas on the chalkboard. Remember brainstorming only gets ideas, it does not try to criticize, evaluate, or determine if they are practical at this time. The brainstorming should take only about 5 to 10 minutes.

Give the class about 5 minutes to review the list of ideas which were placed on the board.

By vote of the class members select 5 or 6 of the ideas which they think are best at this time.

Divide the class up into 5 or 6 groups and assign a product idea to each group. Each group should continue research in more depth to determine whether or not their product idea is one which the class should produce.

The following questions should be answered by each group:

1. Do you think this product is an useful product? Why?

2. Do you think this product could be sold to people you know? Why?

3. Are tools and machines available in the shop to make this product? List those tools and machines you think would be needed.

4. Are materials available in the shop to make the product? List the materials you would need.

5. Have you seen this product available in any stores or catalogs? If so which ones?

6. How much did it cost, if you have seen it in a store or catalog?

7. Can you figure out what it would cost to make this product? Have your instructor help you look up material cost.

8. Why do you think this product would be a good product for the student enterprise to produce?

ACTIVITY #21

During this activity you will be conducting a market research to determine if your product idea has consumer appeal.

You will be doing your market research on the product idea your group was working with in Activity #6.

It is recommended that you have a prototype of the product, but a good picture will work if time does not permit to make a prototype.

The market survey questions you will be using are found on the following page. These questions will help to determine whether your product is marketable. Each member of the group should take 10 to 15 market survey forms. Ask your teachers, parents, or friends to fill it out. Be sure to explain the purpose of the survey to the people.

When all members of your group has returned their market survey forms you should tabulate the results of all forms onto the market survey tabulation sheet. This sheet is found following the market survey question sheet.

When all groups have finished tabulating the results of their market surveys the class should then discuss and compare these results to determine which of the products is most likely to be a success.

One person should write the results of each question for each product on the chalkboard or on an overhead projection. This will permit the class to observe the results of all products on one form for easier comparisons. The form entitled Product Tabulation of Market Surveys should be used.

After all results are tabulated and the class has had a chance to discuss each product in more depth they should vote to see which product to produce.

MARKET SURVEY FORM

1. Sex

   A. Male
   B. Female

2. Age

   C. 12 yrs. or under
   D. 13 yrs. old
   E. 14 yrs. old
   F. 15 yrs. or older

3. Have you seen this product or one similiar in a store?

   G. Yes
   H. No

4. Do you presently own a product like this or one similiar?

   I. Yes
   J. No

5. Have you seen this product advertised recently?

   K. Yes
   L. No

6. If your answer to question #5 was "Yes", what medium was used to advertise the product?

   M. Television
   N. Radio
   O. Newspaper
   P. Other _____

7. If this product were made available to you, would you purchase one or more?

   Q. One
   R. Two
   S. Three
   T. More, how many _____

8. How much would you be willing to pay for this product?

   U. $.50 to $1.00
   V. $1.00 to $1.50
   W. $1.50 to $2.00
   X. More than $2.00

9. Do you prefer light or dark colors?

   Y. Light
   Z. Dark

10. What recommended changes would you make in the product?

    _____

    _____

    _____

    _____

MARKET SURVEY TABULATION SHEET

PRODUCT: _____

RESPONSES:

A. _____	N. _____
B. _____	O. _____
C. _____	P. _____
D. _____	Q. _____
E. _____	R. _____
F. _____	S. _____
G. _____	T. _____
H. _____	U. _____
I. _____	V. _____
J. _____	W. _____
K. _____	X. _____
L. _____	Y. _____
M. _____	Z. _____

QUESTION #10 RESPONSES

PRODUCT TABULATION OF MARKET SURVEYS

RESPONSES	PRODUCT ____ RESULTS	PRODUCT ____ RESULTS	PRODUCT ____ RESULTS	PRODUCT ____ RESULTS	PRODUCT ____ RESULTS	PRODUCT ____ RESULTS	PRODUCT ____ RESULTS	PRODUCT ____ RESULTS
A								
B								
C								
D								
E								
F								
G								
H								
I								
J								
K								
L								
M								
N								
O								
P								
Q								
R								
S								
T								
U								
V								
W								
X								
Y								
Z								

Wilson Junior High School

★ ★ ★ ★ ★ 335 N. BADGER AVE. APPLETON, WISCONSIN

MR. DELMAR A. SCHUH, Principal
MR. ROBERT L. RANDA, Vice-Principal

"TREE HUGGERS"

Dear Consumer,

The Wilson 9th grade Enterprise Class is proud to announce the development of a sensational new product.

The product should be a hunters delight, for it is designed to help him shoot deer, where never before possible.

Bow hunters and gun hunters alike should make this exceptional purchase. "A Tree Stand"!!! The design of this tree stand will allow the hunter to climb, as well as comfortably sit in the tree.

It is quality built from angle aluminum and ply wood. It is light to carry, strong enough to support 300 pounds and even Mr. Christopherson!!!

The low, low price of this tree stand is approximately $20.00. Remember, if you use this tree stand, "YOU WON'T FALL, BUT YOUR BUCK WILL."

If you are interested in seeing this tree stand or purchasing a tree stand, please contact Mr. Jacob in the Industrial Arts Area or complete this attached form and put it in Mr. Jacob's mail box.

YES, I WOULD BE INTERESTED IN PURCHASING A TREE STAND!

NAME _____

ADDRESS _____

TELEPHONE _____

Thank you for your cooperation.

Sincerely yours,

Leslie Erwin
Secretary

ACTIVITY #22

During this activity you will determine the different methods you have seen used for advertising particular products or services.

The following products are common to all our lives, can you identify the methods you have seen in which these products or services are advertised.

1. Bicycle
2. Car
3. Books
4. Cosmetics
5. Breakfast cereal
6. Sports events.
7. Gasoline
8. Clothes
9. Job positions
10. Furniture
11. Television repair
12. Education
13. Music
14. Television shows
15. Photography

ACTIVITY #23

During this activity you will compare different advertisement techniques to determine its effectiveness.

Bring in five product advertisements and discuss with others in the class the good and bad points connecting with each method of presentation of the product or service in advertising.

ADVERTISEMENT	GOOD AND BAD POINTS

ACTIVITY #24

During this activity you will determine which advertisement techniques would be best for advertising to specific groups of people.

List the advertising ways you might use to promote the following products to the specific groups of people.

1. Your enterprise product to students and teachers in the school.

2. Mowing grass in your neighborhood.

3. Children's toys to children between the ages of 6 to 10.

4. Cosmetics to women.

5. School dance to students.

6. Set of tools to men.

7. Holiday vacation to families.

8. Breakfast cereal to children between ages of 6 to 12.

9. Track meet to students, parents, and community.

10. Bicycle repair shop.

ACTIVITY #25

During this activity you will develop advertisement for your student enterprise product or service.

Do both of the following:

1. Develop a visual form of advertisement which might be used to promote your product or service.

2. Develop a verbal advertisement which might be used on the radio, public address system, or personnel contact to promote your product or service.

ACTIVITY #26

During this activity you will select a product advertisement and determine its success.

Select one product advertisement which stands out in your mind that you have seen. Describe why this advertisement caught your eye, why was it more noticeable, how was it different from others? Describe as many characteristics as you can which makes it be a stand out in ypur mind.

ACTIVITY #27

During this activity you will analyze various marketing problems and determine how you might solve the problem.

1. You can buy 500 model airplanes for $.05 each. Planes like this frequently sell for $.15 each. How would you decide if you should buy these planes and try to re-sell them?

2. You think that a class yearbook might sell. You have all of the materials needed to produce the yearbook and an estimate of the cost of each copy. What should you do next to determine a market? How would you go about this?

3. You have 500 model airplanes you purchased for $.05 each. How would you create a demand for these planes?

4. You are a member of a school club which decides to sell candy bars to earn some money. How can you inform the students and teachers that these candy bars are being sold? How would you inform them that the cause is a good one? List as many ways as you can think of.

5. List the different ways you have experienced or seen food advertised?

6. You have made ten bird houses to sell. How would you go about selling these bird houses to your neighbors?

7. Give two ways you could increase the sales of electric guitars.

8. You are a member of the track team and hardly anyone shows up at the home track meets. You have a good team and believe it is important for fans to be at the meets. How would you and your fellow team members try to get more people to come to the meets?

ACTIVITY #28

During this activity you will be reviewing different job positions to determine the management attributes which are similiar in each job.

Remember to keep in mind what your instructor has told you about management and what you have read about management in your text.

Look at each of the following job positions and answer the questions on the following page pertaining to each job. Give examples.

1. Manager of a baseball team.
2. Company president.
3. Principal of the school.
4. Owner of the supermarket.
5. President of the local bank.
6. Chairperson of the school picnic.
7. Foreman of the shop.
8. Scoutmaster of Troop 23.

The attributes listed below may help you.

Management - guiding and directing activities.
Organizing - combining or giving structure to the business.
Planning - establish procedures and ways to do things.
Implement - put into action.
Operate - keep things going after they are in action.
Control - supervise, evaluate to be sure things are being done.
Improve - try to better the present ways.

ACTIVITY #29

During this activity you will be applying the management functions.

Your class has decided to have an ice skating party. They have put you in charge of making all the arrangements. How would you apply the functions of management to this problem?

ORGANIZE -

PLANNING -

IMPLEMENT -

OPERATE -

CONTROL -

IMPROVE -

ACTIVITY #30

I - III - 10

LEVEL I - American Industry
UNIT III - Organizing an Industry
Lesson 10 - Introduction to Management
Student Activity Assignment Sheet #1

WHO'S BOSS!

Who has the "final say" in your home? Dad or Mom? Usually it's Dad, isn't it? Let's start at the other end. Suppose you lived in a home that had a family of five, plus a dog, and that you were the oldest child and had a younger brother and a still younger sister. If you had five chairs in a room and were all asked to sit down, which one in your home would not get a seat? Your dog would have to remain on the floor, wouldn't he? Why? Isn't he the one who has least amount of authority? If you had only four chairs, who would be the next in line to be "left out?" Probably your younger sister! We could follow this all the way up through your younger brother, you, your mother, and finally your dad. (If he wasn't polite and let your mother have a chair.)

You could, if you wanted to, draw up a chart to show you the line of authority. Here is how it would look.

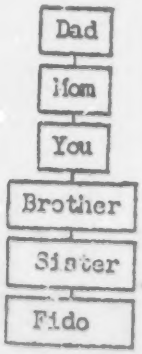

Some families could set up theirs to look like this.

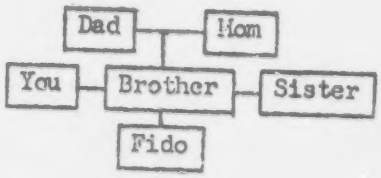

I - III - 10 SAAS #1

When Wes was setting up his company, he also wanted to organize the men and authority. To do this, he could arrange them the way he wanted, then draw up a line chart to help show the lines of authority, to keep the men organized, and to help them get along with each other.

He might have drawn up his chart like this.

WES'S PRONTO PRE-FABS, INC.

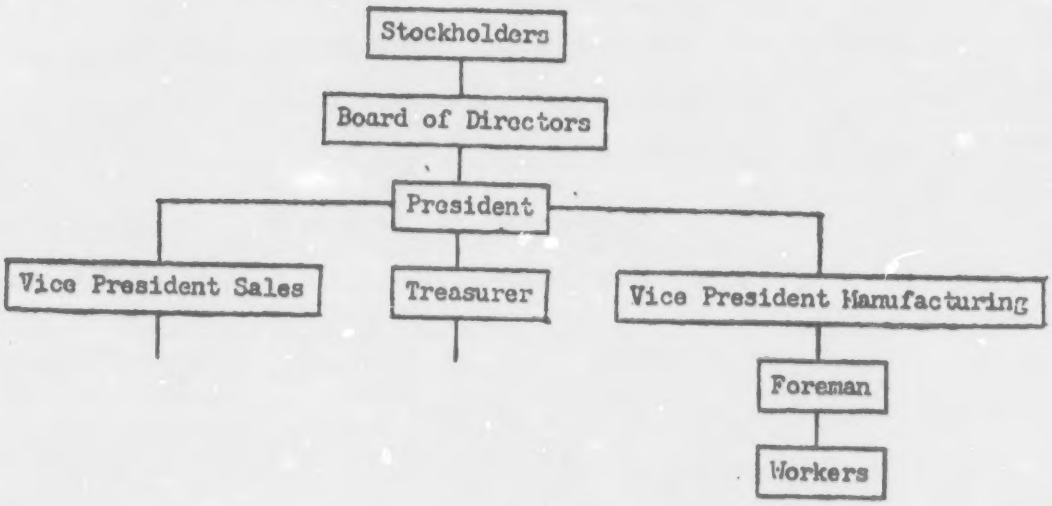

In this structure, the chart shows that the stockholders control the corporation. When charts are drawn up to show the structure of the company, the person or group that is located at the top has the most authority. The group directly below this, on the chart, is responsible to the group directly above them. This procedure follows throughout the entire chart.

If the board of directors is responsible to the stockholders, who is directly responsible to the board of directors?_____

I - III - 10 SAAS #1

Who is directly responsible to the vice president of manufacturing?

Take the public school positions listed below and place them into the proper position on the chart.

1. Elementary student
2. Junior High student
3. Senior High student
4. Elementary teacher
5. Junior High teacher
6. Senior High teacher
7. Superintendent
8. Adult in school district
9. Junior High principal
10. Board of education
11. Senior High principal
12. Elementary principal

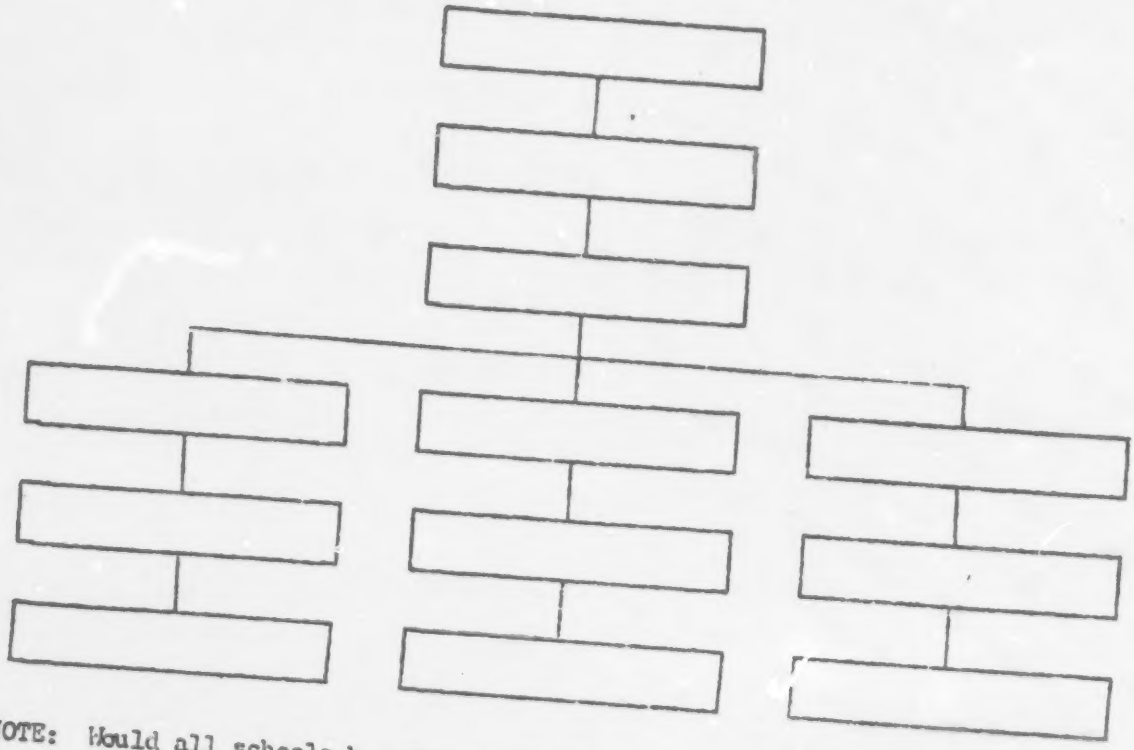

NOTE: Would all schools be structured this way? Why not?

ACTIVITY #31

During this activity you will be structuring an organizational chart showing positions, their relationship with other positions, and the lines of authority.

In order for any business enterprise to operate smoothly each member should know where he stands within the organizational structure and to whom he is responsible.

Take the public school positions listed below and place them into their proper position on the organizational chart.

1. Elementary student
2. Senior high principal
3. Board of Education
4. Senior high student
5. Junior high student
6. School district people
7. Superintendent
8. Junior high principal
9. Senior high teacher
10. Elementary principal
11. Junior high teacher
12. Elementary teacher

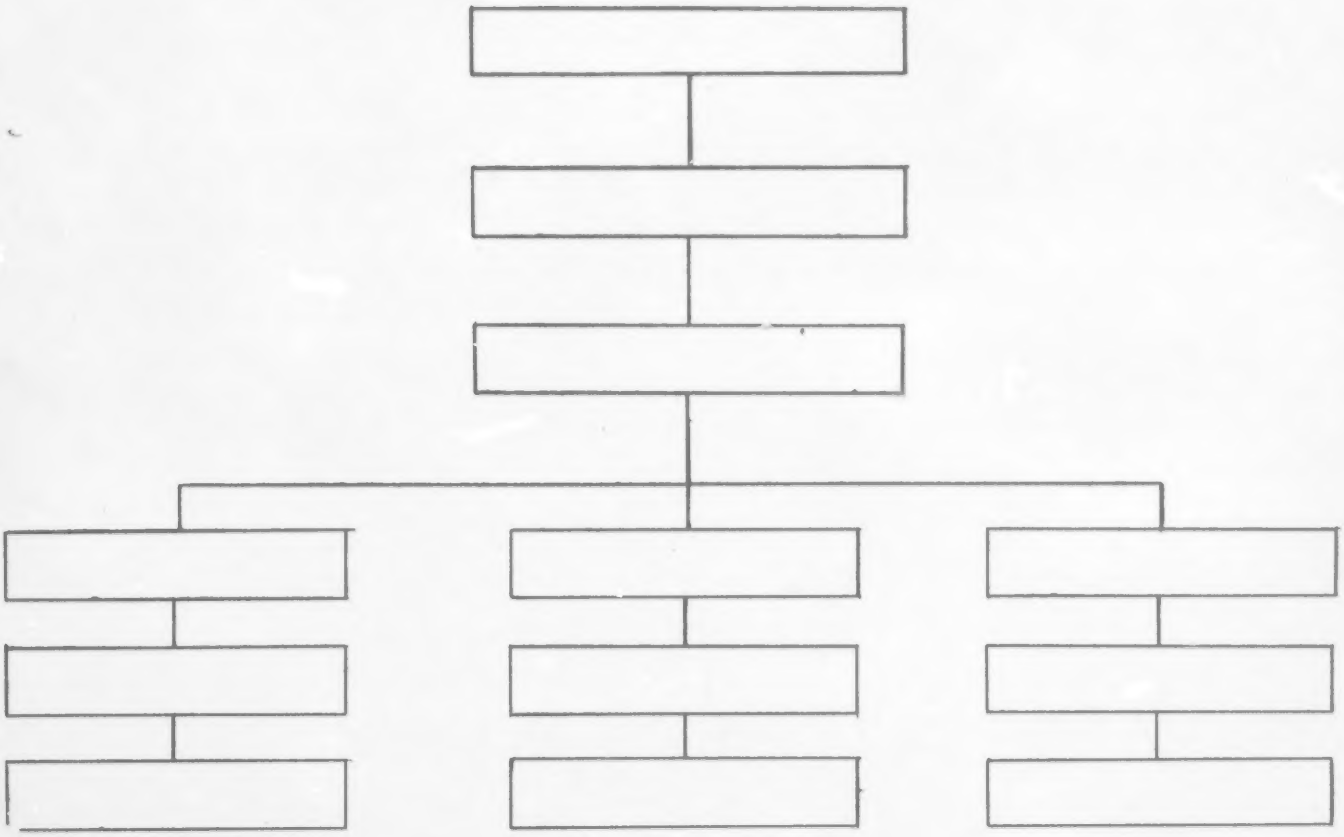

ACTIVITY #32

During this activity you will provide an organizational structure for your student enterprise.

Place the following positions into an organizational chart.

1. Manufacturing engineer
2. Product design
3. Finance manager
4. Production control
5. Quality control
6. President
7. Production manager
8. Materials manager
9. Marketing manager
10. Personnel manager
11. Board of Directors
12. Stockholders
13. Plant engineer
14. Workers

ACTIVITY #33

During this activity you will do some role playing to acquaint yourself with job interviews.

Many companies, after reviewing the job application, want to interview the applicant to meet the person, become better acquainted, and see how the person expresses himself verbally. The interviewer tries to learn all he can about the applicant - his abilities, hobbies, interests, and how he gets along with other people. The interview tells what sort of general impression the applicant will make in personal contact situations. Specific traits noted by the interviewer are use of language, neatness, posture, mannerisms, and grooming. The interviewer should be well acquainted with the job description and the information on the job application. The interviewer should attempt to get the applicant to talk as much as possible and not control the discussion completely.

Now you are ready to be interviewed for your job in the company. Things needed will be the job description, job application, and interview evaluation form.

Find a partner. Exchange job descriptions, and job applications. Spend about ten minutes going over the other persons forms and think of what type of questions you are going to ask the person.

Spend ten minutes interviewing your partner, then reverse the positions and allow your partner to interview you.

After both interviews have been completed fill out the attached interview evaluation form.

INTERVIEW EVALUATION FORM

Name of applicant: _____

Name of interviewer: _____

Position being applied for: _____

Appearance (comment as to outward appearance and conduct): _____

_____

_____

_____

Physically fit for job: _____

_____

_____

_____

Knowledge about job or position: _____

_____

_____

_____

General comments: _____

_____

_____

_____

Qualified for job applied for: _____

Qualified for other jobs in enterprise (state which jobs): _____

_____

_____

Interviewer's signature: _____

ACTIVITY #34

During this activity you will become acquainted with the types of ownership found in the world of industry.

Complete the following questions.

1. Name the three most common types of ownerships.

2. Give two advantages and two disadvantages of each type of ownership.

3. Name some business, store, or industry which is an example of each type of ownership.

4. Which type of ownership does your mother or father work in?

5. Which type of ownership would be best for our student enterprise? Why?

FINANCE

ACTIVITY #35

During this activity you will become familiar with the attributes of finance.

Answer the following questions.

1. What need(s) do you have for money each week? List them all.

2. How much do you need for each item listed in question #1?

3. Where do you get the money? If more then one source list them all.

4. What do you do in return for getting the money?

5. How do you keep from over spending in one of your needs or being sure it will last you all week?

In the above questions you determined a NEED for money, the QUANTITY you would need to last the week, the SOURCE of your money, what it COST you to get the money, and the method you use to CONTROL the money.

FINANCE

ACTIVITY #36

During this activity you will be establishing a budget for yourself for a week.

Your parents have given you an allowance of $5.00 for the week and told you that you must set up a budget so it last you all week. Some items are necessary such as, $.40 each day for lunch. You also want to go to the movies on Saturday and that will cost $1.00. You would like to go to the basketball game Friday night and that will cost $.50 . Almost forgot something to eat at both the movie and basketball game, that will cost $.30 each time. Mom and Dad said you must save $.50 each week. You have to buy a pack of notebook paper for English class, that will cost $.30 . You just remembered your Mother's birthday is coming up in four weeks and maybe you should start saving $.50 each week to buy her a present.

Set up your budget and see if you have enough money or if you will have to cut something from your budgeted items. If you have to cut down in anyway you may lower something instead of eliminating it entirely. Justify any changes.

BUDGET

ITEMS	COST
1.	$
2.	
3.	
4.	
5.	
6.	
7.	
8.	

TOTAL EXPENSE $

PROFIT OR LOSS $

CHANGES:

1. $

2.

New Total Expenses $

ACTIVITY #37

During this activity you will be establishing a budget for a product to be produced. (You may substitute this activity by using the product being produced by the class).

The students at Valley Junior High School have decided to establish their own business. In starting a business they can discover how a business operates and, as in any business, attempt to earn a profit.

The class, of twenty(20) students, selected a company name of Enterprises, Incorporated. Upon completing their organization of personnel and jobs, they investigated the production possibilities of several products. The decision to make Tower Peg Games was made when market research indicated that they could sell about 100 games.

In planning for production they found a need for wood, dowel rod, hardboard, finish, glue, felt, and packaging material.

At the end of three weeks the class had produced and sold 100 games at a price of $1.50 each. In checking their records they found the following.

9/12	Stock sold to each class member (Owner's Equity) 20 shares at $2.00 per share	$40.00
9/13	25 board feet of walnut, $1.00 per board foot	25.00
9/14	Pre-sales income, $.75 downpayment on 50 games	37.50
9/15	15 dowel rods ¼" x 36" , $.07 per dowel rod	1.05
9/15	One quart of lacquer finish	3.00
9/15	Three pieces of green felt 2'x3', $3.00 per piece	9.00
9/15	One pint of glue	1.35
9/15	One sheet of hardboard 4' x 4'	3.00
9/15	One quart of red paint	3.50
9/15	One quart of blue paint	3.50
9/20	100 pieces of packaging film, $.02 per piece	2.00
9/20	Advertising posters	3.00
9/26	Income from pre-sales of 9/14 $.75 for 50 games	37.50
9/27	Income from remaining 50 games at $1.50 per game	75.00
9/28	Sale of materials leftover	5.00
9/29	Labor wages ($4.00 per student)	80.00
9/29	Owner's equity returned	40.00
9/29	Dividends ($.98 per share)	19.60

Using the information on the preceding page answer the following questions in evaluating the enterprise.

1. How many games were sold? ----------_____
2. What was the selling price per game?----------_____
3. How many games were produced, but not sold? ----------_____
4. How much money did the enterprise have to start with? ---_____
5. Where did the enterprise get their money? ----------_____
6. Was the initial money enough to cover all expenses? -----_____
7. What other source did the enterprise use to gain income to pay for materials? ----------_____
8. What was the total income from sales? ----------_____
9. How much profit was made? ----------_____
10. How much did each student receive as wages? ----------_____
11. How much did each shareholder get, original investment plus dividend? ----------_____
12. What was the cost per product? ----------_____

ACTIVITY #38

During this activity you will place entries on a financial journal.

Take all the entries found in Activity #5 and put them on the financial journal provided on the next page.

Finance Mgr. _____

DATE	ITEM DESCRIPTION	ACCOUNT CLASSIFICATION	P.O. NUMBER	DEBIT	CREDIT	BALANCE

ACTIVITY #39

FINANCE

During this activity you will learn some things about reading the stock market averages, what they mean, and you will have the opportunity to invest some pretend money into some corporations.

Unit III
Lesson 14
Activity #1

BUY OR SELL?--PROFIT OR LOSS?

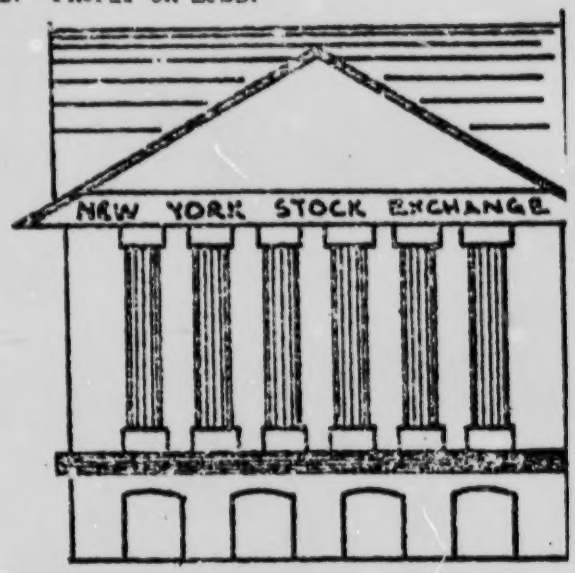

Many times we have heard on the radio, or have seen on television, "the Dow-Jones stock averages." We have also seen sections of the newspaper entitled "Closing Transactions on the New York Stock Exchange." This section consists of many columns of small print that might read:

Air Prod .20 31¼ 33 33½ -1

<u>What does all this mean to you?</u>

On the next page we will discover more about the stock market.

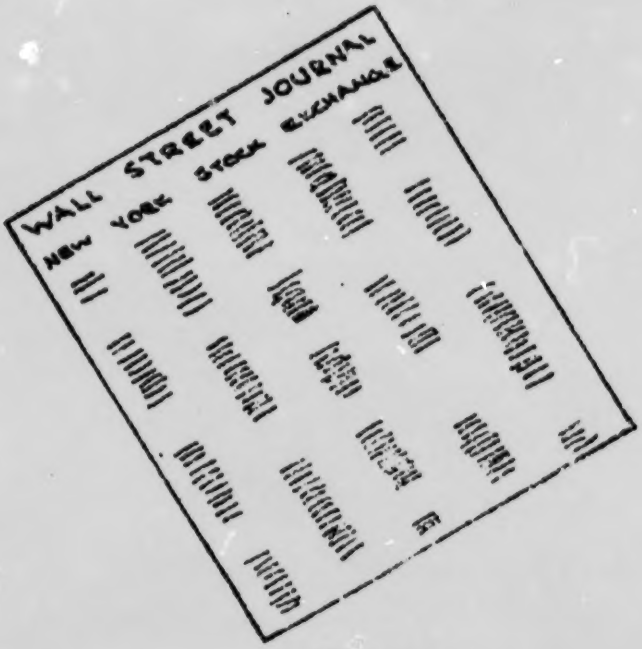

This is how a typical stock market report will look in a newspaper.

NEW YORK STOCK MARKET

STOCKS	DIV.	SALES (HDS)	HIGH	LOW	LAST	NET CHG.
Admiral	.6	235	44 3/8	42 3/4	43	-1
Aeroquip	.6 b	3	40	40	40	- -
Air Prod	.20	47	37 1/8	34 1/8	34 1/2	+1 5/8
Air Red	2.50	64	61 1/4	58 1/2	58 5/8	-1 1/8
AJ Industries	- -	45	5 5/8	5 3/8	5 1/2	- -
Ala Gas	1.80	1	33 1/4	33 1/4	33 1/4	- -
Alberto Culv	- -	82	12 1/4	12 1/8	12 1/4	- -
Alcan Alu	.90	430	32 7/8	30 7/8	32	-1 1/4
Coca Cola	1.90	119	78 7/8	78 1/8	78 1/2	-1/8

(b - Plus 2% stock dividen

On the next page is an explanation of this market report.

(This method of listing the New York Stock Market may not be the same in al papers, but it will be quite similar.)

NOTE: Stock prices are in dollars and fractions of 1/8's.

Look at the extreme left of the stock listings. These abbreviations represent the various companies or corporations that offer shares of stock in their corporation. (If you know the name of the corporation you want, it is quite easy to understand the abbreviations.)

Find Coca-Cola under "Stocks." The first group of numbers you see is the amount of dividend the shareholder received for each share of stock of Coca-Cola he owned. If a letter appears behind this, such as "b" after Aeroquip, check the explanation insert near the bottom of the page. How much was the dividend for Coca-Cola?_____

The next group of numbers represents the number of Coca-Cola shares in hundreds that were sold that day. How many hundred were sold that day?_____

Following the sales you will see the high for the day. In other words, this is the highest price paid per share that day. What was the highest price paid for Coca-Cola that day?_____

The next group is the low which means the lowest price paid that day per Coca-Cola share. What was the low?_____

In the next column the last or closing price for the day is shown. What was the closing Coca-Cola price?_____

In the last column the net change is listed. This is the difference between yesterday's closing and today's closing price. It may be a gain (+) or a loss (-). What was the net change for Coca-Cola?_____

Now let's see if you understand what you have read. See if you can answer the following questions:

1. What was Admiral's closing price?_____
2. What was the net change of Alabama Gas?_____
3. What was the day's high for Air Products?_____
4. What was the day's low for Aeroquip?_____
5. How much of a dividend, per share, did the shareholders of Alabama Gas receive?_____
6. What was Alcan Aluminum's closing price?_____
7. How many shares of Admiral were sold?_____

Pretend that you have $1,000 to invest in the stock market and that you can select one or many corporations in which to purchase shares. Use the "Stock Market Quotation Form" found at the end of this activity and keep a record of your shares.

It is wise to study the stock and economic trends before you select and purcha stocks. (Many stock purchasers use a stock broker for this.)

To help you do this, you could follow the Dow-Jones stock averages, which is a daily report on four different types of stock; 30 industrial rails, 20 railroad, 15 utilities, and 65 stocks composite averages. They help show you market trend, or if the prices are rising or falling. Do you know what causes market trends? Could it be a company decision to merge with another; a change in government financial policy, a strike by employees of a company; or just a history of financial success for a company? Look at the news clippings on the next page and state how you think the stock(s) would react to news like this. Would prices go up, down, or stay the same? Why?

Gillette 1st Period Net Expected to Be Record

Glass Union Summons Full Bargaining Panel To Discuss New Offer

Phelps Dodge Corp., just getting back into copper production after a long strike, was ordered by the Government to reserve 50% of its April copper production for defense needs and the "remainder for badly-needed civilian consumption." Industry sources interpreted the directive to mean Phelps Dodge will be relied upon almost exclusively to supply military requirements of about 26,000 tons of copper monthly.

Auto Output to Climb During Week; Overtime Continues to Increase

International Harvester Holders Vote to Boost Firm's Capitalization

In the five instances above, the stock went up almost immediately. Why do you think the prices on these stocks went up?

With a few days to study the market, prepare to invest the $1,000 mentioned earlier. Investigate your proposed investments, then buy the stocks you have selected. Use the form on the next page to record your purchases and to track the daily prices.

I - III - 14

STOCK MARKET QUOTATION REPORT FORM

Name_____ Date_____

Name of industry_____

Source for readings (name of paper)_____

Record your readings (closing price):

	HIGH	LOW	CLOSING
1st Reading	_____	_____	_____
2nd Reading	_____	_____	_____
3rd Reading	_____	_____	_____
4th Reading	_____	_____	_____
5th Reading	_____	_____	_____

Low for the reading period_____

High for the reading period_____

Calculate your profit or loss by figuring the difference of the price of your shares of stock at the 1st reading's closing price and the closing price when you sold it.*

Show your work.

Profit or loss (Circle correct result).

*NOTE: You may buy and sell stock whenever you wish, however, you must not purchase more than the original $1,000.

ACTIVITY #40

PRODUCTION

During this activity you will plan the production quantities of materials needed to produce the class product.

How many will the company produce? _____

List each material needed for the product, its total quantity, and sizes.

May use one of the following four products.

MATERIAL NAME	SIZE	QUANTITY FOR TOTAL PRODUCTION (board feet, square feet, etc.)

PRODUCTION

ACTIVITY #41

During this activity you will experience preparing a route sheet for production planning.

Take the product being produced by the class, or some other product, and break it down into its individual parts. Prepare a route sheet for each part and a route sheet for assembly.

Remember a route sheet is the planning of operations in sequence to get that part from its rough material specification to its finished material specification.

Use the attached route sheet. If you need more ask your instructor.

ACTIVITY #42

During this activity you will familiarize yourself with the production planning symbols used in developing a flow process chart.

Beside each of the following statements draw the correct flow process symbol.

A. Lumber is moved from storage to radial arm saw.

B. Material waits at assembly for other parts.

C. A man examines part for quality.

D. A man fastens a bolt and nut into place.

E. A man sands and checks shape of a part.

F. A side of beef is placed into a freezer until purchased.

G. A fork lift transfers crates between areas.

H. A man cresscuts a piece of stock to length.

I. A part is sprayed with varnish.

J. A part is checked for accurate length.

K. Parts are stacked in a warehouse awaiting distribution.

L. A part moves on a conveyor from machine #1 to machine #2.

M. Two pieces are glued together.

ACTIVITY #43

PRODUCTION

Activity #4

During this activity you will experience the proper numbering of activities on a flow process chart.

Number the activities in the following flow process chart in their correct sequence:

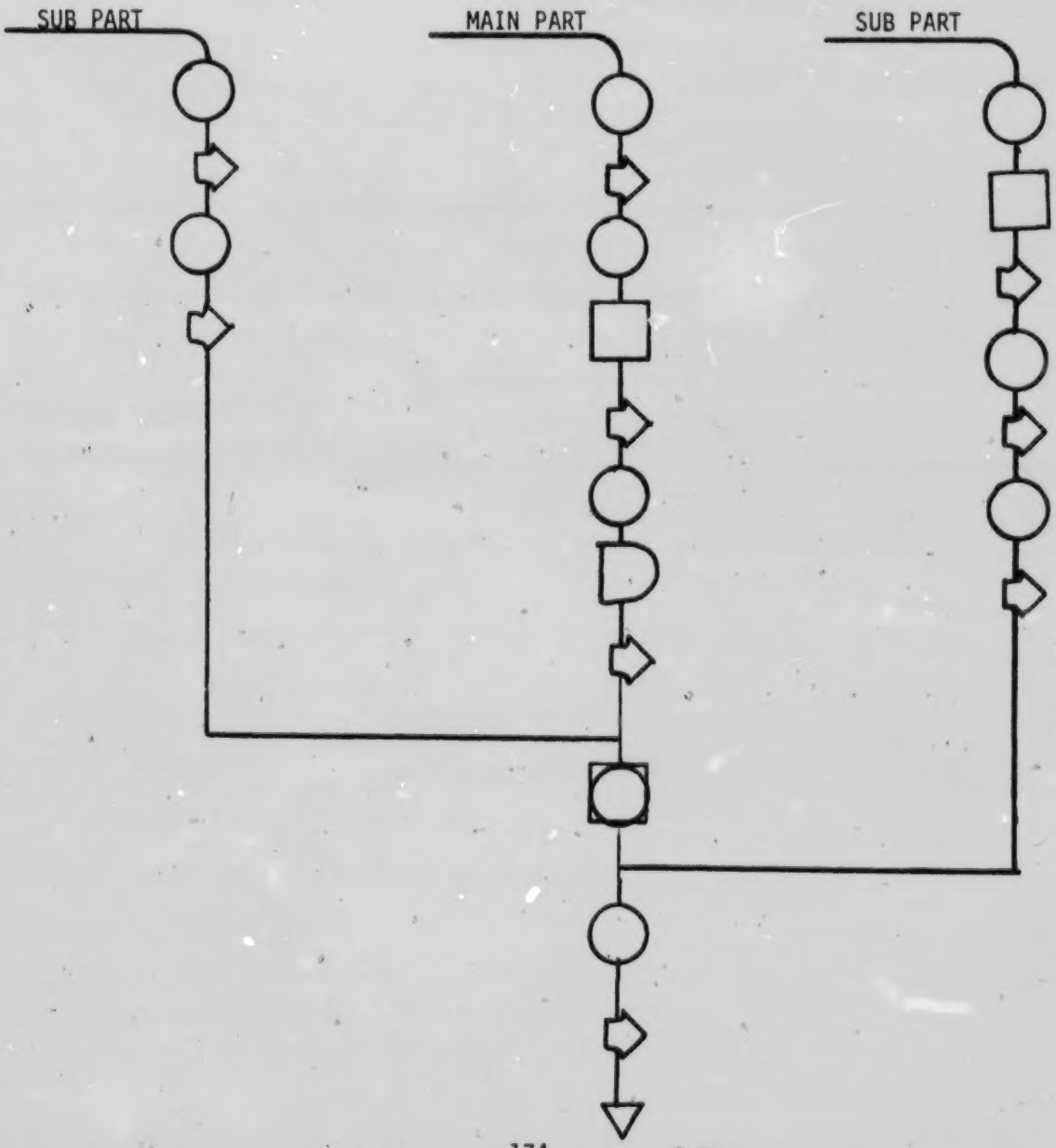

PRODUCTION

Activity 44

During this activity you will experience finding the correct information from a flow process chart.

See attached two pages.

ACTIVITY #44 - A

PRODUCTION

Using the flow process chart on the following page answer the following questions to determine information.

A. How many local operations are involved in the production?

B. Which jointer will be used to joint part #1 to 5 1/2" width?

C. What is the finish thickness of part #1?

D. Why is there a dwell?

E. Which arbor saw will perform the ripping operation on part #2?

F. What length will the rough boards for part #1 be cropped to and cut?

G. Why is O-14 and I-3 a combined activity?

H. What operation does assembly start?

I. What are the specifications of the raw material for part #2?

J. What is the name of part #1?

K. What inspection number is final inspection?

L. How many total transportations are involved in the production?

M. What is the finish length of part #2?

N. How many operations involve the radial arm saw?

Activity 44-B

7	Crop and cut to 20" length on radial arm saw
7	Move to jointer #1
8	Joint one face and one edge
8	Move to surfacer
9	Surface to ½" thickness
2	Check ½" thickness
9	Move to arbor saw #2
10	Rip to 4 1/16" width
10	Move to jointer #2
11	Joint to 4" width
11	Move to radial arm saw
12	Crosscut to 5½" length
12	Move to assembly
1	Crop and cut to 30" lenth on radial arm saw
1	Move to jointer #1
2	Joint one face and one edge
2	Move to surfacer
3	Surface to 3/4" thickness
1	Check 3/4" thickness
3	Move to arbor saw #1
4	Rip to 5 9/16" width
4	Move to jointer #2
5	Joint to 5½" width
5	Move to radial arm saw
6	Crosscut to 5½" length
6	Move to assembly
13	Glue pieces together
13	Move to sander
1-3 0-14	Sand and check for smooth shape and edges
14	Move to finishing room
15	Finish with Deft
1	Drying time 30 minutes
4	Final Inspection
1	Move to storage
1	Storage

210

Activity 44-B

7	Crop and cut to 20" length on radial arm saw
7	Move to jointer #1
8	Joint one face and one edge
8	Move to surfacer
9	Surface to ½" thickness
2	Check ½" thickness
9	Move to arbor saw #2
10	Rip to 4 1/16" width
10	Move to jointer #2
11	Joint to 4" width
11	Move to radial arm saw
12	Crosscut to 5½" length
12	Move to assembly
1	Crop and cut to 30" lenth on radial arm saw
1	Move to jointer #1
2	Joint one face and one edge
2	Move to surfacer
3	Surface to 3/4" thickness
1	Check 3/4" thickness
3	Move to arbor saw #1
4	Rip to 5 9/16" width
4	Move to jointer #2
5	Joint to 5½" width
5	Move to radial arm saw
6	Crosscut to 5½" length
6	Move to assembly
13	Glue pieces together
13	Move to sander
I-3 / O-14	Sand and check for smooth shape and edges
14	Move to finishing room
15	Finish with Deft
1	Drying time 30 minutes
4	Final Inspection
15	Move to storage
	Storage

ACTIVITY #45

During this activity you will experience developing a flow process chart.

Take the route sheets developed in Activity #41 and form a flow process chart using the proper symbols. Remember the route sheets only had operations so you will have to decide where inspection, transportation, delays, and storages will be taking place.

ACTIVITY #46

PRODUCTION

During this activity you will experience writing a work order for production.

Take any three operations from the flow process chart and write out a work order. Use a form like the one attached to this activity. Remember you will be communicating to someone on the production line how they will proceed in processing a certain part. Be sure to be thorough in your description and complete in giving the necessary information.

ACTIVITY 46-A

WORK ORDER

OPERATION NO.:	MACHINE:
PART NO.:	PART NAME:
DRWG. NO.:	DATE STARTED:
JIG OR FIXTURE NO.:	DATE FINISHED:

MATERIAL SPECIFICATIONS:

PREVIOUS WORK STATION:	TOOL TO BE USED:
NEXT WORK STATION:	

DETAILED OPERATIONAL PROCEDURES:

NO. OF PCS. NEEDED:	SET-UP TIME:	TIME PER PC.:

OPERATOR NAME(S)	DATE	TIME STARTED	TIME FINISH	NUMBER PRODUCED	NUMBER OF REJECTS
	TOTALS				

ACTIVITY #47

During this activity you will experience developing a jig or fixture to be used in the production of a product part.

Each person in the class may be assigned to develop a different jig or fixture depending on the total number of operations.

Select one operation from the flow process chart and complete the following form while developing a jig or fixture.

ACTIVITY #47-A

JIG AND/OR FIXTURE DESIGN

DESIGNER'S NAME: _____ DATE: _____

PRODUCT: _____ PART NAME: _____

DRWG. NO.: _____ PART NO.: _____

JIG/FIXTURE NO.: _____ OPERATION NO.: _____

MACHINE: _____ TOOL: _____

FUNCTION OF JIG/FIXTURE:

MATERIALS NEEDED TO MAKE JIG OR FIXTURE:

QUANTITY	ITEM	SIZE

SKETCH OF JIG OR FIXTURE: (Place on back of this sheet with dimensions).

ACTIVITY #48

During this activity you will experience developing an inspection gauge for quality control.

Select an inspection point which appears on the flow process chart and design an inspection gauge.

Use the attached inspection gauge design sheet in completing this activity.

ACTIVITY #48 INSPECTION GAUGE DESIGN SHEET

DESIGNER'S NAME: _____ DATE: _____

PRODUCT: _____ PART NAME: _____

PART NO. _____ DRAWING NO. _____

GAUGE OR INSTRUMENT: _____ INSPECTION NO. _____

LOCATION: _____ OPERATION NO. _____

FUNCTION OF INSPECTION:

MATERIALS NEEDED IF AN INSPECTION GAUGE MUST BE MADE:

QUANTITY	ITEM	SIZE

SKETCH GAUGE WITH DIMENSIONS: (place on back of this sheet)

PRODUCTION

ACTIVITY #49

During this activity you will identify various production flow patterns, machine arrangements, and assembly flow patterns.

Identify the following production flow patterns and give an advantage of each.

A.

TYPE:
ADVANTAGE:

B.

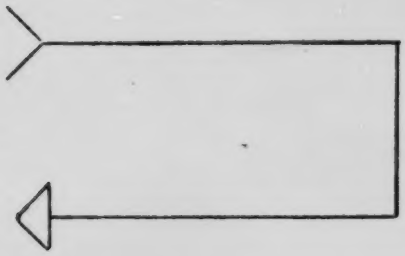

TYPE:
ADVANTAGE:

C.

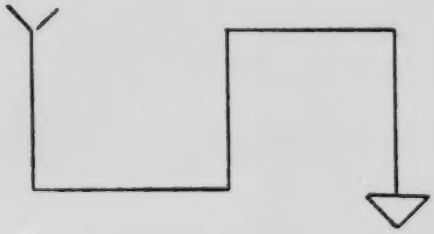

TYPE:
ADVANTAGE:

D.

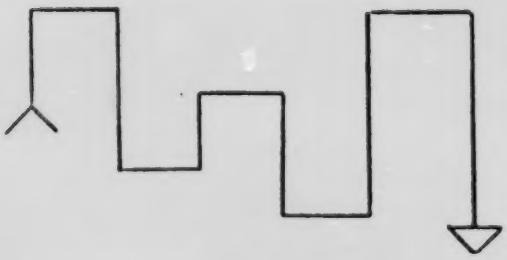

TYPE:
ADVANTAGE:

219

Identify the following machine arrangements and give an advantage of each:

A.

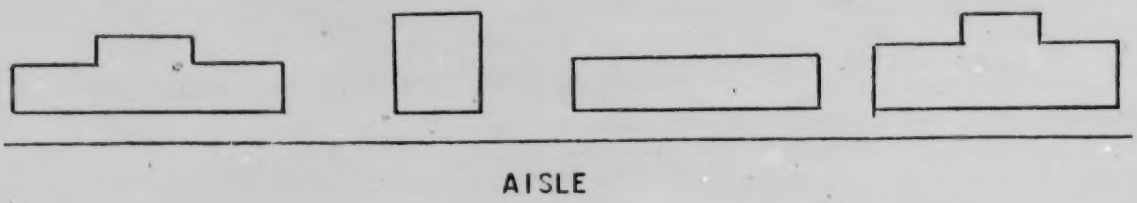

TYPE:

ADVANTAGE:

B.

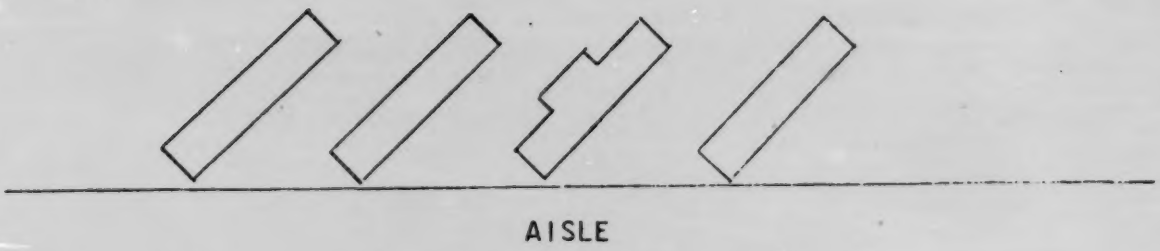

TYPE:

ADVANTAGE:

C.

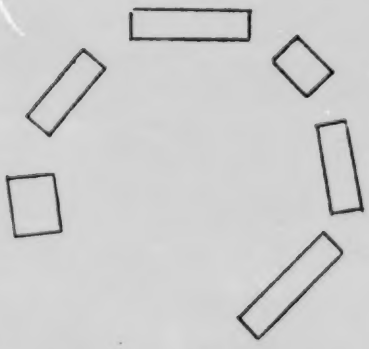

TYPE:

ADVANTAGE:

Identify the following assembly line flow patterns and give an advantage of each.

A.

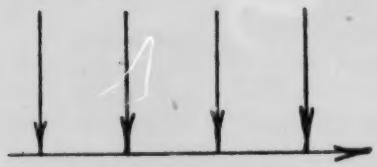

TYPE:

ADVANTAGE:

B.

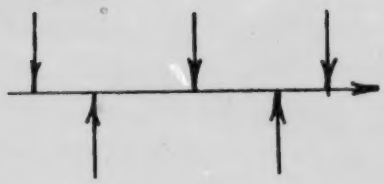

TYPE:

ADVANTAGE:

C.

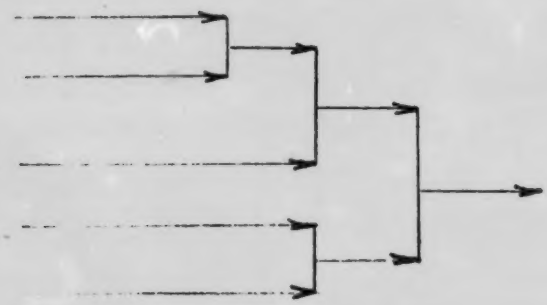

TYPE:

ADVANTAGE:

D.

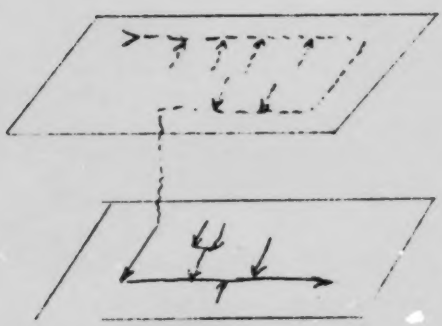

TYPE:

ADVANTAGE:

ACTIVITY #50

During this activity you will experience selecting the correct production layout.

Using the attached worksheet, which has three different types of production layouts, answer the following questions. More than one answer may be correct, put all correct answers down.

A. Which plant(s) has an assembly line? _____

B. Whic plant(s) has a layout by fixed position? _____

C. Which plant(s) would have the longest distance to move materials between operations? _____

D. Which plant(s) would be excellent for handling frequent changes in products? _____

E. Which plant(s) is justified if a large quantity of components or products are to be manufactured? _____

F. Which plant(s) reduces material handling? _____

G. Which plant(s) has used a comb flow pattern for assembly? _____

H. Which plant(s) has been laid out by process? _____

I. Which plant(s) would likely require skilled craftsmen? _____

J. Which plant(s) are likely to produce components? _____

K. Which plant(s) has a line production? _____

L. Which plant(s) is most likely to employ unskilled labor? _____

M. Which plant(s) is most likely to have an overhead crane? _____

N. Which plant(s) have a convoluted flow pattern? _____

O. Which plant(s) is likely to have fixed routing of materials? __

P. Which plant(s) moves workers through fixed position assembly? ___

Q. Which plant(s) is most likely to use motion study? _____

R. Which plant(s) production is based on the rate of production? ____

S. Which plant(s) would most likely use conveyors? _____

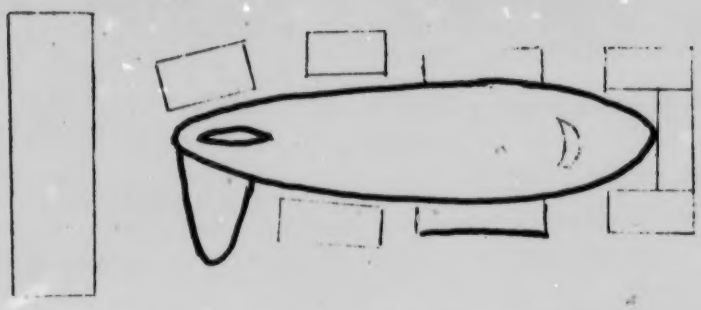

PLANT "A"

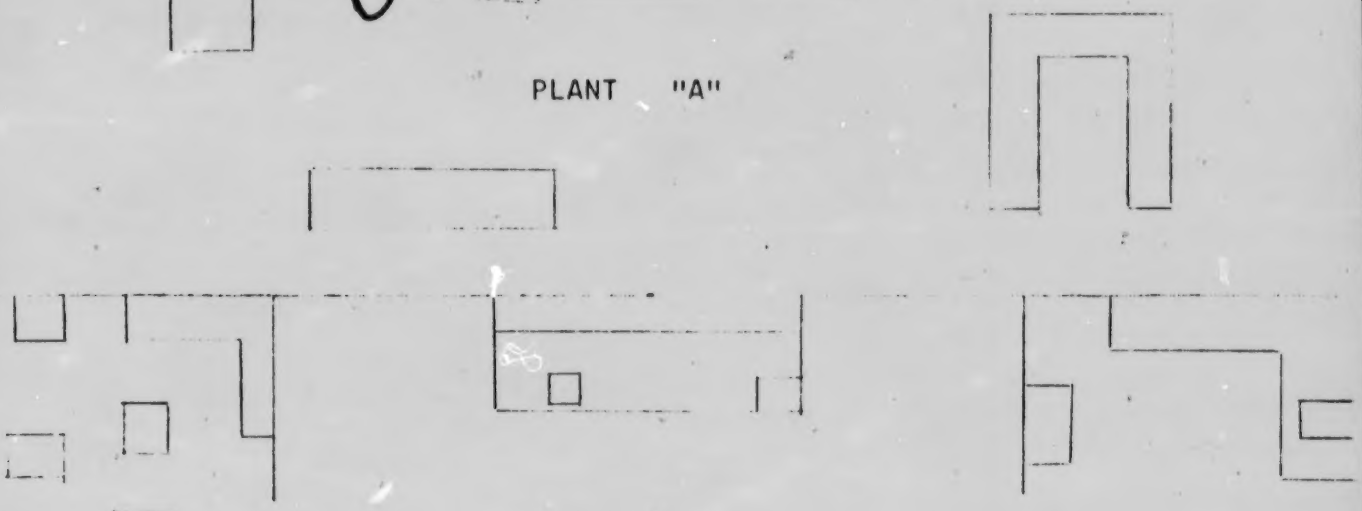

PLANT "B"

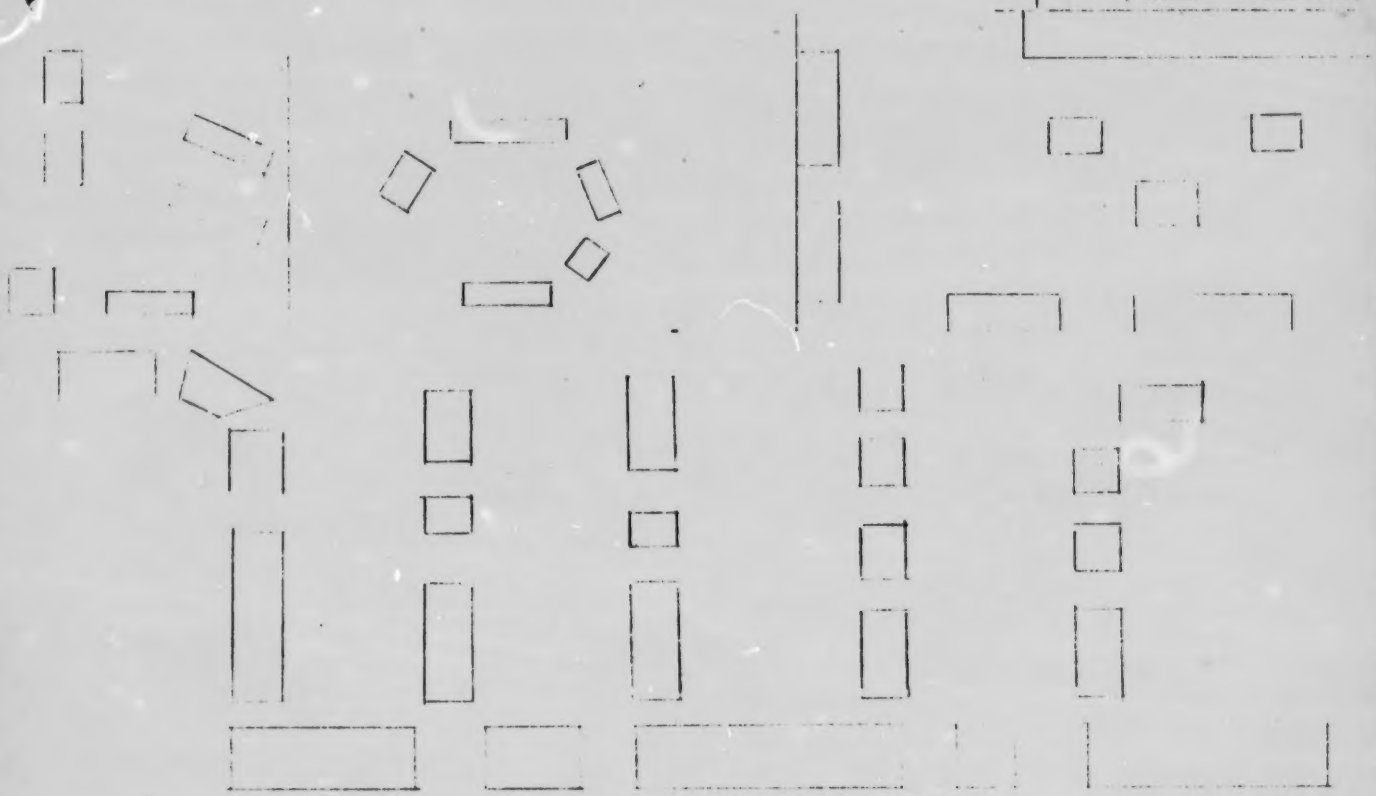

PLANT "C"

ACTIVITY #51

OAK GROVE JUNIOR HIGH
INDUSTRIAL EDUCATION
PRODUCTION PLANNING

NAME _____

MODS _____ FOLDER _____

RATIONAL: Manufacturing is important to Everyone. Some people will find jobs in Industry, but everyone depends on Industry in our everyday lives.

Products do not just appear from raw materials, but are produced as a result of many steps and processes. This packet will help you understand what happens before a product is actually produced.

REQUIRED:

- O Attend the large group lecture and finish the study guide.
- O Read the information sheet on Production Planning found on page _____.
- O Develop a Route Sheet beginning on Page _____.
- O Develop a Flow Process Chart beginning on Page _____.
- O Develop a Plant Layout beginning on Page _____.

OVERTIME OPTIONS

$3.00 Obtain a piece of drawing paper from your instructor, and make a mechanical drawing of your plant layout.

$1.00 Take any one of your past projects and develop a Route Sheet, a Flow Chart and a Plant Layout for it. Each is worth one INDUSTRIAL DOLLAR.

PRODUCTION PLANNING:

Production takes place only after plans have been made. Plans are based on information gathered concerning the product to be purchased.

At this time we will define two terms we need to know to understand Production Planning. First; Production is defined as those activities of a company which are concerned with the making of a product. Production Planning is defined as the activities we need to understand when preparing for production

Production Planning has one basic goal--to make the best plan possible for good production. Good planning today will save time, effort and money tomorrow. It is impossible to have a good production operation without good production planning.

In this package we will make a Route Sheet, a Flow Chart and a Plant Layout. We will assume that the product is the letter and key holder that you drew in the Product Design and Development Package. Assume that we are going to produce 200 letter/key holders of your design.

Throughout the package we will use the "Brain Buster" Washer puzzle as an example for you to follow. Later in the unit we will produce the "Brain Buster" Washer game using the plans we are using for examples here.

The first step in Production Planning is to develop a route sheet and the first step in making a route sheet is to list all possible "operations" necessary to take a piece of wood and make it into your finished design. "Operations" are for example: sanding, cutting, drilling, finishing.

In the "Brain Buster" game for example our list of operations would look like this:

Sand Holes
Cut Strings
Burn String Ends
Tie Knots
Put in Bag
Fold Instructions
Staple

Now list all the operations which will have to be performed to complete your key holder in a mass production line.

The second step in Production Planning is making a Route Sheet. The Route Sheet is a standard industrial form used to show the correct order of the operations needed to complete the product.

Here is a sample Route Sheet for the "Brain Buster" game:

Open No.	Description of Operation	Machine	Tools, Jigs, Etc.
1	Drill Center	Drill Press	Center Hole Fixture
2	Drill End	Drill Press	End Hole Fixture
3	Sand Edges		
4	Cut Strings	Knife	String Cutting Fixture
5	Heat Ends		
6	Tie Knot		
7	Washer #1		
8	Middle Knot		
9	Washer #2		
10	Bag		
11	Fold Instru.		
12	Fold and Cut Label		
13	Staple	Staple Gun	

Now on the sheet provided list your operations in order on the Route Sheet which is on the next page.

OPERATION NO.	DESCRIPTION OF OPERATION	MACHINE	JIGS AND FIXTIRE

After completing the Route Sheet turn to the next page and begin the third part of this package.

FLOW PROCESS CHART

Now that we have a Route Sheet for your Key Holder we can use that and develop a Flow Process Chart.

A Flow Process Chart shows the operations done to the product, as did our Route Sheet. The Flow Chart goes one step further and shows where the product must be handled, inspected, stored and assembled.

A Flow Chart helps in four ways:

1. It can find high cost areas of production.
2. It can schedule parts so they are at the right time.
3. It locates "Inspection Routes" (parts where it can be checked for proper size and ownership).
4. It can place machines so that handling is kept to a minimum.

In order to "read" and later make a Flow Chart you will have to know the five symboles commonly used on Flow Process Charts:

SYMBOL	EXPLANATION
1.	OPERATION: Work performed in making a product Example (Drilling, Cutting, Sanding)
2.	Transportation: Moving the piece from one work station to another. Example (Move from Drill Press to Table Saw)
3.	Delay: Temporary storage Example (Drying time often we paint something)
4.	Storage: A waiting period or time the item is not in production. Example (Raw materials storage)
5.	Inspection: Checking product sizes and workmanship. Example Measure length of piece)

HERE IS THE FLOW CHART FOR THE "BRAIN BUSTER" GAME, STUDY IT THEN TURN TO THE NEXT

Description of Event	Operation	Transport	Inspection	Delay	quantity	Rejects	
Drill Center							
Drill End							
Move to Sanding Area							
Inspect							
Cut String							
Heat Ends							
Tie Knot							
Move to Assembly Area							
Attach Washer No. 1							
Tie Middle Knot							
Move To Packaging							
Put in Bag							
Fold & Cut Labels							
Punch Hole							
Staple							

Page
Date
Product
Part Name
Part No.
Drawing No.
Total to Produce
Notes

TOTAL	NO,	TIME
OPERATION		
INSPECTION		
DELAY		
STORAGE		

Description of Event	Operation	Transport	Inspection	Delay	Storage	Quantity	Rejects	Page Date Product Part Name Part No. Drawing No. Total To Produce Notes

PLANT LAYOUT

This is the fourth and last section of this package on Production Planning. At the end of this package we will layout our plant, the large Production lab, using your Flow Chart, for your Product Design.

In order to gain a background in Plant Layout we will go over the three types of Plant Layouts . They are: Process Layout, Product Layout and Fixed Material Layout.

The first type is Process Layout which is where equipment of similar functions are grouped together and various type products are routed through that dept. An example would be the Drill Press Department of a Machine Shop, where all the drills are located and any drilling operations are through that department. This type of Layout is used when the number of products produced is not large and the same manufacturing plant is used to produce several different products.

The second type of layout is a Product Layout and is used widely in industries where great numbers of the same product are produced. The manufacturing equipment is arranged in the same order as the operations necessary to manufacture the product: An example of this is the assembly lines used to manufacture cans.

The third type of Plant Layout is the Fixed Material Layout. This is where the product stays in one place and the operations and inputs are brought to it. An example would be the Ship Building Industry where the workman and materials are all brought to one place and assembled.

The type of Plant Layout we will be using is a Product Layout and on the next page is the Plant Layout we will be using later when we mass produce the Brain Buster game. Study the layout and then turn to page ____ and work on your plant layout for the Key-letter holder your designed. Remember we are assuming you are mass producing 200 of your holders. Now, check this package in and get your piece of stock for the letter holder. Follow your Route Sheet and perform the operations as listed. In this way you can see if your route sheet is in a good operating order.

THE END

This is the sample layout of the shop for the manufacture "BRAIN BUSTER" GAME

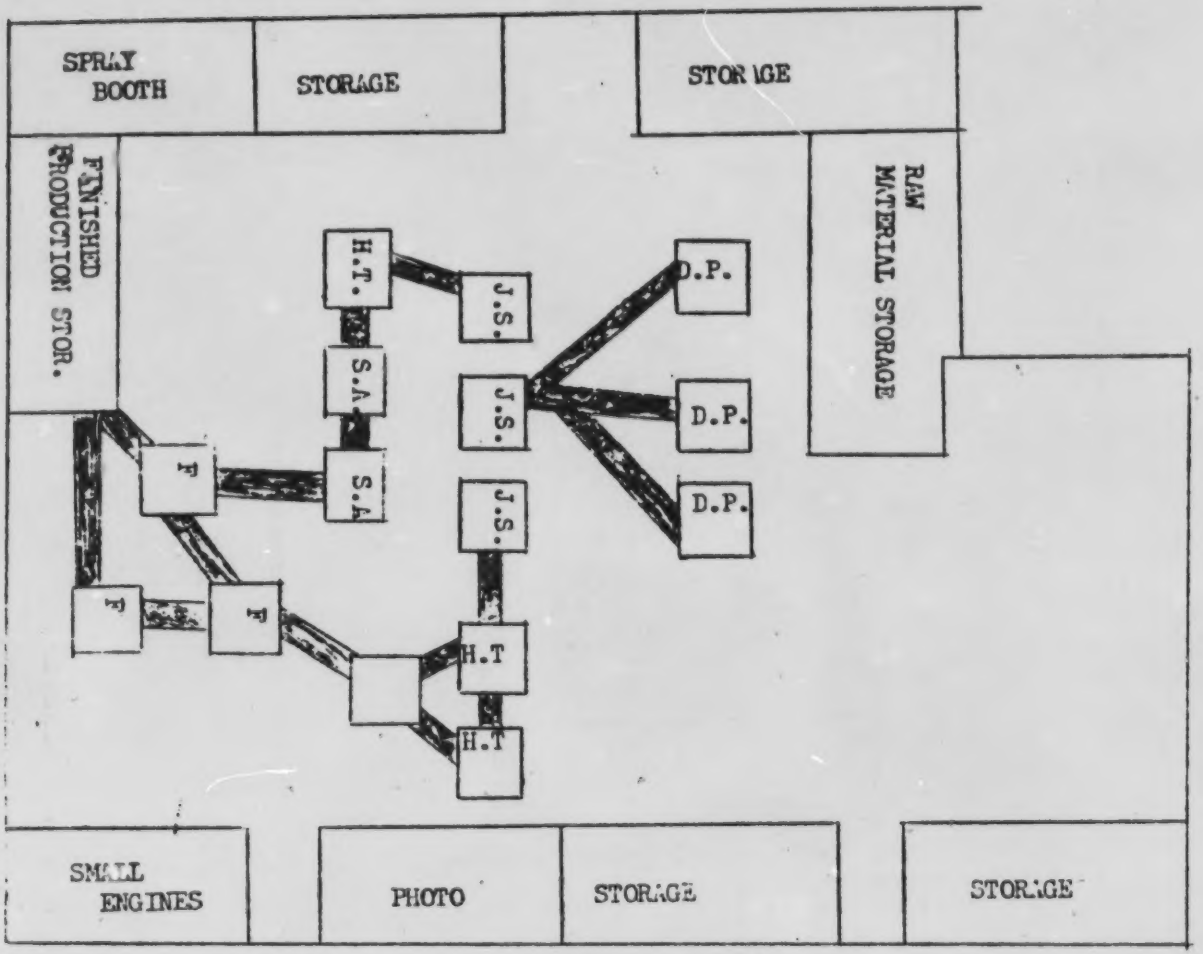

KEY
D.P. Drill Press
J.S. Jig Saw
H.T. Handtools
S.A. Sanding Area
F. Finishing

YOUR LAYOUT

1. Cut out tools and paste them on the layout.
2. Use as many tools & conveyor belts as possible

KEY

D.P. Drill Press
S.A. Sanding Area
J.S. Jig Saw
B.S. Band Saw
C. B. Conveyor Belt
H.T. Hand Tools
F. Finishing

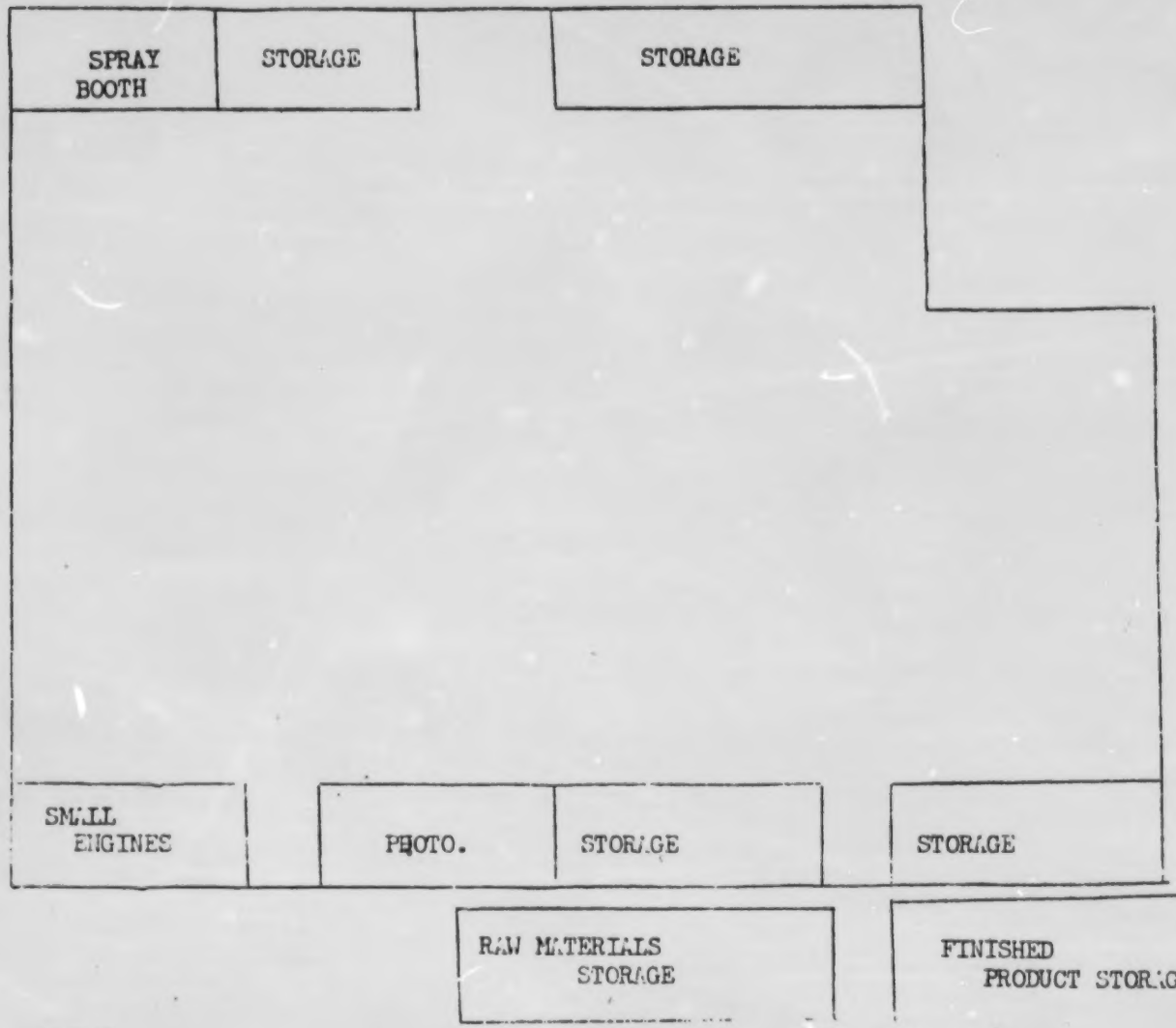

Cut Out

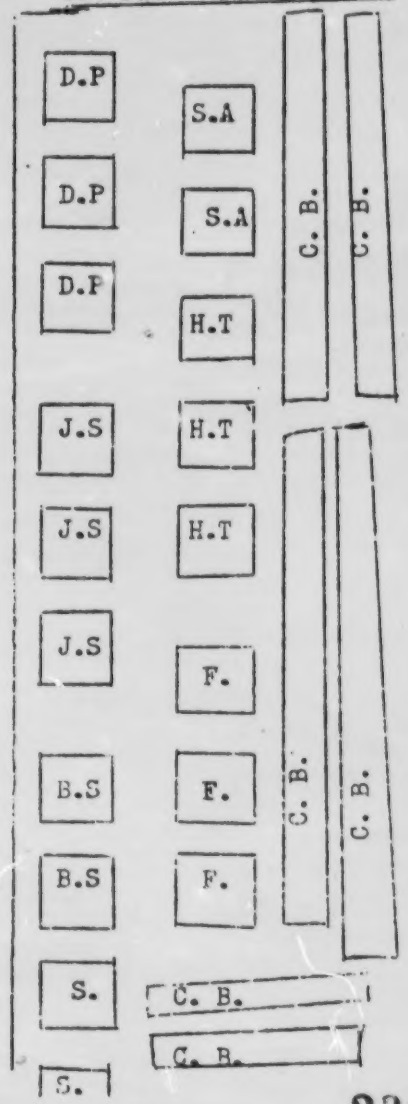

-200-

ACTIVITY #52

OAK GROVE JR. HIGH
INDUSTRIAL EDUCATION

NAME _____
MODS _____ FOLDER NO. _____

DESIGNING A SERVICE MANUAL

You are to design and construct a service manual for your prototype. This manual when complete will contain such things as the identification of the product and manufacturer, instructions, a parts list, a picture or drawing of the product, safety and emergency information, maintenance information, a Warrenty or Guarantee and Servicing information.

TO COMPLETE THIS ASSIGNMENT FOLLOW THESE STEPS:

I. The pages you write and design will be printed in booklet form. Figures 85-11, 85-12, and 85-13 show how (1) one sheet of paper will be folded to make an eight-page booklet which will be covered with a separate "Raparound" Cover (Fig. 85-12). The finished booklet size will be trimmed to 4" x 5". Be certain to keep your designs within this space (Fig. 85-11).

II. COVER

Design an attractive front cover for the Service manual. Include the name of the Corporation, the product name, and model number, and a monogram or trademark. Add other design features according to your own ideas. (Assume the design will be printed by the silk screen printing process. Therefore your final design should use block lettering and art work that can be cut into silk screen film easily). Arrange the information so that it will fit inside a 4" x 5" space.

III. TITLE PAGE

1. Write a page I that includes the following: Name of product; Model, Serial, or Catalog number; name and address of manufacturer.
2. Refine your design to include a border design, a trademark, or other suitable material and arranged to fit inside a 4" x 5" space.

IV. OPERATING INSTRUCTIONS

1. Write a page 2 that explains how to use the product. In some cases this might include unpacking instructions if special considerations or precautions are required. If the product must be assembled by the Customer, describe how this is done and list any special tools, equipment, or supplies that are needed for assembly. If the product must be installed or mounted before it can be used, explain how to install the product as well as how to use the product after installation.
2. Lay out the page so the information will fit inside a 4" x 5" space.

V. TROUBLE SHOOTING

1. If something goes wrong with the product, the Customer will need to know how to look for possible sources of trouble. A list of possible problems and methods of examining for them might be included. Be sure to describe any Safety Precautions which must

be followed to prevent injury to the user or someone else. It might be necessary to include emergency steps to take if something does go wrong. Maintenance information that the owner should know and do to keep the product in working condition should be included. In the case of puzzles and similar products, information as to where a solution to the puzzle can be obtained should be included, etc. . .

2. Fit the information into a 4" x 5" space on page 3 of your manual.

VI. EXPLODED ILLUSTRATION

1. On pages 4 and 5 which will be the Center Fold of your manual, draw an exploded view of the product which shows how the parts are assembled. The parts should be identified by number which correspond to your parts list. If there is room, the parts can also be named. Sometimes the parts are given catalog numbers and names for replacement purposes.
2. Plan the drawing so that it will fit in the 5" x 8" format of pages 4 and 5.

VII. PARTS LIST

1. Use pages 6 and 7 for your parts list. Provide a complete list of items in the package as well as a list of parts that make up the assembled product. Be sure to tell how many of each part (quantity) is included along with the description of the parts.
2. Divide up the information so that you use both page 6 and page 7.

VIII. WARRANTY PAGE

1. State some type of pledge to the Consumer as to the product's quality. Study warranties and guarantees in sample service manuals. Write samples of warranty paragraphs, and decide which statements to use. If parts or components are under warranty, explain how and where service can be performed (servicing).
2. Fit the information into a 4" x 5" space for page 8.

IX. Fold your completed manual as shown in Fig. 85-11. Fold and staple cover in place as shown in Fig. 85-12. Trim all edges except the stapled fold using a scissors (1/4" on three sides). The finished size should be 4" x 5".

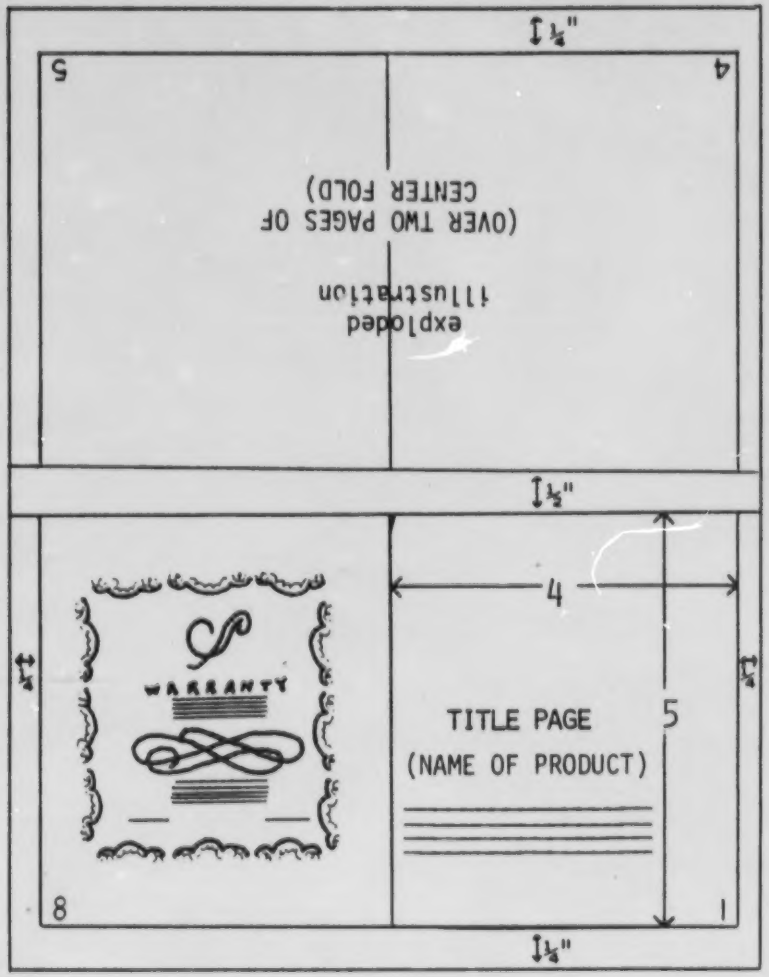

239

Top Surface

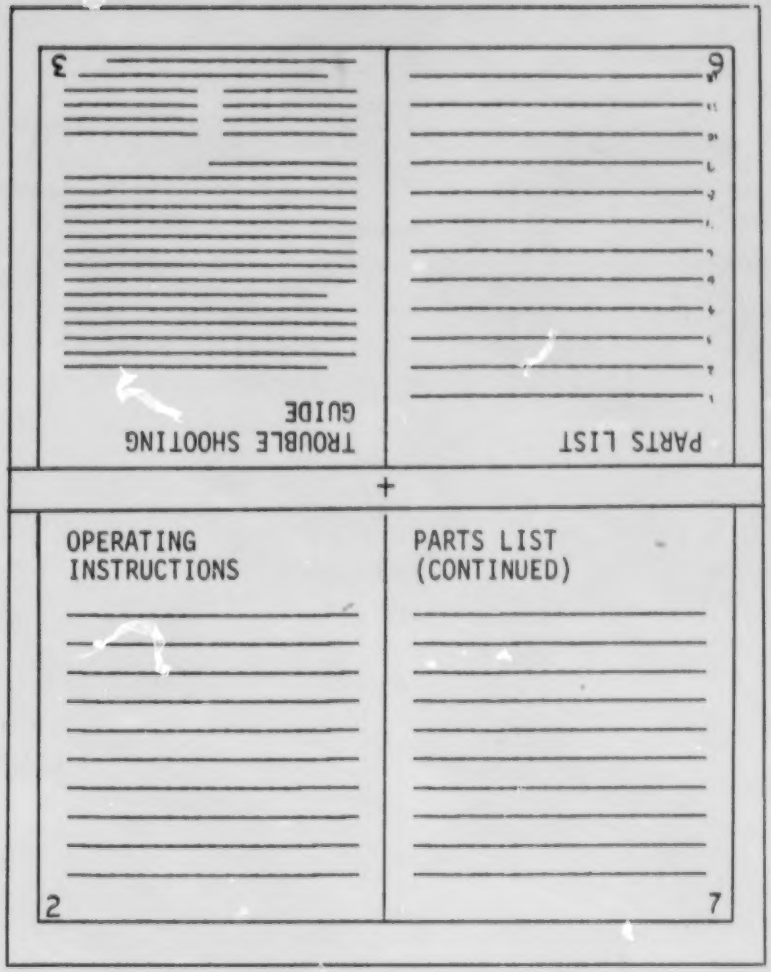

240

Bottom Surface

(ONE SHEET-PRINTED FRONT & BACK)

How Paper is Folded to Form

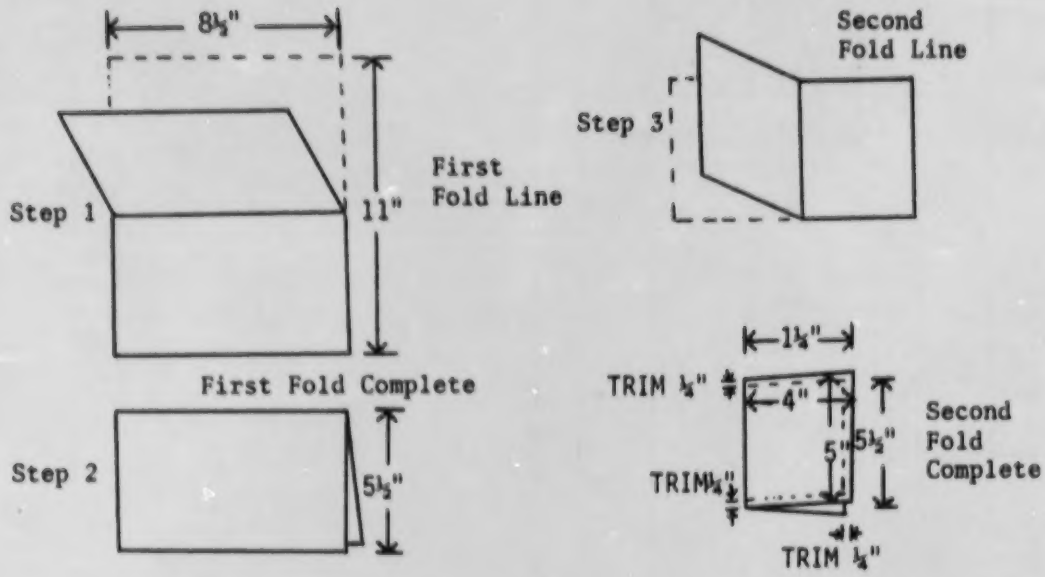

Fig. 85-11. Service Manual

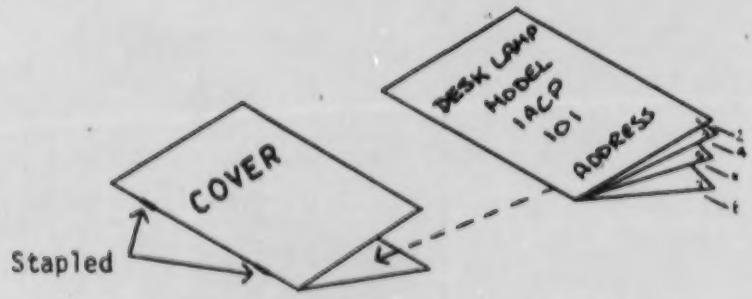

Fig. 85-12. How Manual Will Be Covered

ACTIVITY #53

During this activity you will research for the types of energy found in the shop.

Make a list of the types of energy you can locate in the shop. After you have listed them try to determine if each are heat, chemical, mechanical, or atomic form of energy.

ENERGY	FORM

ACTIVITY #54

During this activity you will determine the appropriate changes in the form of energy.

Match the statements of changing the form of energy to the device which makes the appropriate changes in the form of energy.

_____ 1. Chemical to electrical
_____ 2. Light to chemical
_____ 3. Electrical to light
_____ 4. Chemical to mechanical
_____ 5. Nuclear to heat
_____ 6. Mechanical to electrical
_____ 7. Light to electrical
_____ 8. Electrical to heat

A. Light bulb
B. Atomic reactor
C. Film in camera
D. Internal combustion engine
E. Flashlight battery
F. Generator
G. Flowing water
H. Solar battery
I. Electric stove
J. Bicycle

During this activity you will be able to demonstrate the different forms of energy.

Each student may build at home a working model of some form of energy and bring in to demonstrate and explain to the class.

Suggestions may be to use erector sets, tinker toy sets, solar cell kits, electrical kits, steam engine, light meter, static electricity, etc.

ENERGY

ACTIVITY #56

During this activity you will trace the flow of energy from its source to the point where you use it.

May select one of the following:

1. Trace the flow of electricity from its source to an electrical light in your home.

2. Trace the flow of water energy from its source to your home.

3. Trace the flow of natural gas from its source to your home for heating or cooking.

4. Trace the flow of solar energy from its source to solar batteries to heat your home.

ENERGY

ACTIVITY #57

During this activity you will develop some kind of energy system to move parts or products during production.

Develop a transfer mechanism which will move parts from one operation to another on the production line. It might be a conveyor, gravity feed chute, air pressure, etc.

PROPERTY

ACTIVITY #58

During this activity you will be looking at the attributes of property. You may need your parents help with this one.

Answer the following questions:

1. When you moved into your present home or apartment how was it determined how many pieces of furniture would be needed?

2. Who determined where each piece of furniture would be placed?

3. Why were certain pieces of furniture selected?

4. In each of the above questions was planning used in providing furniture for your home or apartment? If so, how?

5. Does the property owned by you or your parents include any or all of the following:

Land _____, Buildings _____, Equipment _____, Furniture _____,

Materials _____, Cash _____, Birth certificate _____,

Checkbook _____, Savings bond _____, Car _____, Bicycle _____,

Land title _____, Television _____.

6. Each of the above pieces of property seem to have different characteristics. Can you divide them into tangible and intangible types of property?

Tangible	Intangible

7. Divide your list into permanent and tenporary classification of property.

Permanent	Temporary

8. Are there controls placed on your property? If so, what kinds of restrictions or limitations?

9. What type of maintenance is necessary to keep the property owned by you and your parents in good operating condition?

10. How could you dispose of the property owned by you and your parents?

PROPERTY

ACTIVITY #59

During this activity you will determine what items are the property of the student enterprise and how they would be classified. For this activity assume the machines in the shop are owned by the enterprise.

In the spaces below identify five different pieces of property thatare owned by the student enterprise. Classify as tangible or intangible and as permanent or temporary. State your reasons for classifying as permanent or temporary.

PROPERTY	TANGIBLE OR INTANGIBLE	PERMANENT OR TEMPORARY	REASON WHY
1.			
2.			
3.			
4.			
5.			

ACTIVITY #60

PROPERTY

During this activity you will determine some features concerned with planning property layout.

Using the grid paper provided, draw a floor plan of your home or apartment, show placement of furniture, and the direction of the building is positioned on the land.

What changes would you make in re-planning this layout? Consider direction building faces, access patterns, traffic patterns inside, placement of furniture, and overall positioning of rooms.

ACTIVITY #61

During this activity you will be planning a property layout.

Property layout is very important to an enterprise. Whether it be your home, an office, a supermarket, a department store, or a manufacturing company the layout planning is essential to a smooth flow of people or materials through the building.

It is important that our student enterprise have a good layout so our production goes smoothly.

Using the grid paper provided, make a drawing of the shop and position the machines and benches into a well planned production layout. To do this you will need to know the order of operations.

During this activity you will be examining the importance of maintaining your property.

Answer the following questions.

1. What things do you and your parents do to preserve the value of your home and land?

2. What do you do to keep your clothes, toys, etc. from being ruined?

3. What does your father do to keep the family car in good operating condition?

4. What do you see being done around the school that would be classified as preserving the property?

5. How does your instructor have you to help maintain the shop?

6. How are the tools and machines in the shop maintained so you can safely use them?

7. What do all of the above have in common?

8. Is maintenance of property important? Why?

ACTIVITY #63

During this activity you will research some information about the materials used in the production of a product.

Select one of the following products and answer the questions:

Products: product being produced by student enterprise.
product found around the home.
your home.
Your bicycle.
family car.

1. List all the materials which you can identify that are used in the building of the product.

2. Why do you think these materials were selected?

3. Name some other materials which could have been used? Tell why they were not used.

4. What are the characteristics of these materials which were used in making the product?

MATERIALS

ACTIVITY #64

During this activity you will identify materials which are natural or manmade.

Choose one or more of the following:

1. Ask the instructor for the box of materials which you are to identify as natural or manmade. List them below.

	Natural	Manmade
A.		
B.		
C.		
D.		
E.		
F.		
G.		
H.		
I.		
J.		

2. Which of the following materials are natural? And which are manmade? Put "N" in front of those which are natural and "M" in front of those which are manmade.

_____ A. Iron ore	_____ G. Cloth	_____ M. Rubber
_____ B. Aluminum	_____ H. Clay	_____ N. Wax
_____ C. Plastic	_____ I. Paint	_____ O. Copper
_____ D. Wood	_____ J. Animal hides	_____ P. Ceramic
_____ E. Crude oil	_____ K. Paper	_____ Q. Ink
_____ F. Steel	_____ L. Glass	_____ R. Cotton

ACTIVITY #65

During the following activity you will identify materials which are monolithic or composite.

Choose one or more of the following:

1. Ask your instructor for the monolithic/composite box of materials for you to identify. List them below.

Monolithic	Composite
A.	
B.	
C.	
D.	
E.	
F.	
G.	
H.	
I.	
J.	

2. Which of the following materials are monolithic or composite? Place "M" before those that are monolithic and "C" before the composites.

_____ A. Fiberglass	_____ M. Natural gas
_____ B. Wood	_____ N. Particle board
_____ C. Iron ore	_____ O. Safety glass
_____ D. Concrete	_____ P. Zinc
_____ E. Plywood	_____ Q. Granite
_____ F. Brick	_____ R. Veneered wood
_____ G. Wool	_____ S. Boxboard
_____ H. Lead	_____ T. Acid
_____ I. Water	_____ U. Limestone
_____ J. Frosted cake	_____ V. Precoated metal
_____ K. Clay	_____ W. Marble
_____ L. Animal hides	_____ X. Filled honeycomb

ACTIVITY #66

During this activity you will experience the identification and classification of various processes into their correct groupings.

The following list of processes should be classified according to the conditioning changes.

_____ 1. Extrusion
_____ 2. Annealing
_____ 3. Drilling
_____ 4. Enameling
_____ 5. Silk screening
_____ 6. Forging
_____ 7. Kiln drying
_____ 8. Sanding
_____ 9. Heat treating
_____ 10. Casting
_____ 11. Varnishing
_____ 12. Sawing
_____ 13. Staining
_____ 14. Etching
_____ 15. Injection molding

A. Cutting
B. Forming
C. Modifying
D. Finishing

PROCESSES

ACTIVITY #67

During this activity you will familarize yourself with the processes found in the shop.

Take a tour of the shop and locate each process which could be accomplished. As you find each process classify it into one of the following:

CUTTING	FORMING	MODIFYING	FINISHING

PROCUREMENT ACTIVITY #68

During this activity you will experience the procurement problem to make or buy a part for your product.

Problem:

Your class has decided to make a set of wooden toys as their product. Production control has figured you will need 1000 wheels. The question arises whether it would be cheaper and easier to purchase the wheels ready-made from a manufacturer or make them in the shop. What would you decide and why?

Facts:

Buy

Material - Birch

Size: 1½" diameter
½" thickness
¼" dia. axle hole

Manufacturer's price:
$65.00 per 1000

Pre-made they will have a rounded tread shape and one side will be shaped to appear like a hub.

Postage to have them shipped will be $6.50

Make

Material - Birch

Size: 1½" diameter
½" thickness
¼" dia. axle hole

Lumber price:
$.40 per board foot

Determined that from a piece of birch 2" x 2" x 24" you could get 40 finished wheels.

Wheels will have straight sides no hub shape. Rounded tread shape will have to be done by hand sanding or on a sander.

Machines needed: lathe, cut-off saw, sander, and drill press.

Must consider time to prepare stock for lathe turning and time to process.

Questions to answer about make or buy decision.

1. How much per wheel to buy 1000 of them from a manufacturer? _____

2. How much per wheel to make 1000 of them? _____

3. Does the shop have the equipment necessary to produce? _____

4. Is time a factor? _____

5. Will the wheels appear as good if you decide to make them? _____

6. Do you have enough personnel to handle the additional processing?

7. What other factors should you consider?

8. What is your decision? Why?

ACTIVITY #69

During this activity you will correctly fill out a purchase requisition for ordering materials.

You are a member of the production control department and must requisition the following items for production of the company product.

Remember in requisitioning you are communicating with other departments so you must clearly specify what you want on the purchase requisition. Use the purchase requisition form found on the next page.

Here are the items, you must add other specifications to make them complete.

Item #1. One sheet of plywood.
Item #2. One hammer.
Item #3. Red paint.
Item #4. Box of wood screws.
Item #5. Sandpaper.

PROCUREMENT ACTIVITY #70

During this activity you will experience locating sources for materials to be purchased.

The following materials are needed by your student enterprise, you determine the best source. Remember to consider cost, quality, delivery time, service, discounts, shipping cost, and availability. You should be able to justify your source.

Use catalogs found in the shop, library, or home. You may even want to check at some local stores.

1. 1 sheet ½" x 4' x 8' G2S Exterior plywood.
2. 1 gross 1½" -#8 FH wood screws.
3. 3 pcs. Pine 1" x 6" x 10' #1 common.
4. 2 lbs. 1¼" box nails.
5. 1 16 oz. claw hammer.
6. 2 - 1" x 36" birch dowel rods.
7. 6 pcs. 8" x 11" 120 grit sandpaper.
8. 2 qts. Deft lacquer finish.
9. 2 pcs. 7" x 10" plexiglass, clear, .080 thickness.
10. 1 qt. glue, white.

ITEM	SOURCE	JUSTIFICATION

ACTIVITY #71

During this activity you will experience locating the best source for materials and components needed for a product.

The winter was long and spring finally arrived but it had caught you off guard. You had forgotten that you had wanted to order your new bicycle parts and have your bike ready for the first bicycle jamboree of the spring. It is now only two weeks away but you must get those parts ordered in time for you to fix your bike.

In determining where to buy your parts you must consider cost, delivery time, quality, service, discount, and availability, and shipping cost. You may check in local stores or catalogs. The following parts are needed. Justify your source.

1 - 26" tire and tube.
1 - 26" wheel rim.
1 - rear fender for 26" bike.
1 - bike light.
1 - set of reflectors.

ITEM	SOURCE	JUSTIFICATION

ACTIVITY #72

PROCUREMENT

During this activity you will be concerned with the decision to make, buy or lease items needed.

Under conditions of limited equipment, ability, and finance would you make, buy,or lease the following items? Give your reasons.

_____ 1. Specially designed simple type of garden tool rack, need one at home.
Reason: _____

_____ 2. Typewriter, need for school.
Reason: _____

_____ 3. Dog house.
Reason: _____

_____ 4. Office space in an office building.
Reason: _____

_____ 5. ½" straight shank twist drill.
Reason: _____

_____ 6. Truck for delivering some goods once each week.
Reason: _____

_____ 7. Computer for your employee payroll and inventory.
Reason: _____

_____ 8. 100 board feet of walnut.
Reason: _____

_____ 9. Automobile for a weeks business trip.
Reason: _____

_____10. Shelving for basement.
Reason: _____

_____11. Bicycle for cross country races and recreation.
Reason: _____

_____12. Trailer to move your furniture to a new house.
Reason: _____

Wilson Junior High School

★ ★ ★ ★ ★ 225 N. BADGER AVE. APPLETON, WISCONSIN

MR. DELMAR A. SCHUH, Principal
MR. ROBERT L. RANDA, Vice-Principal

June 6, 1978

Dear Stockholders:

All good things must come to an end; the end of the semester has caused Lucky Seven, Inc. to fold! But not in bankrupcy!! Matter of fact all of you goldbrickers have a return of approximately 50% on your money. Our last phase of operation will be liquidation occurring June 9, 1978.

The class members of Lucky Seven, Inc.:

Ashauer, Sandy	Haas, Ken	
Dominowski, Ted	Hebert, Beth	Petznick, Steve
Elm, Scott	Lastofka, Dave	Remter, Bob
Elmer, Mark	Mc Paul, Jeff	Scorgie, David
Hathaway, Ken	Mc Kinnon, Dan	Steffens, Dean
Haas, Steve	Meidam, Jon	Young, Mike

would like to thank you for your investment in our operation and our future. We experienced much of what really happens in industry; the frustrations of management in controlling its personnel, the pressures of production in controlling quality work. The game table was a dynamite product - we produced over 30 of them. The wood was donated by Mr. Frank Pierre, which helped keep our overhead down considreably. We were still surprised at the high operational cost of this simple production. All other expenses are mentioned on the finance breakdown sheet included.

Next semester there will be another corporation in operation and we hope you will support their building of a corporation by reinvesting.

Sincerely yours,

LUCKY SEVEN, INC.

Chairman of Board Steve Petznick

President Jon Meidam

PRODUCTION FINANCE SHEET

PRODUCT	NUMBER PRODUCED	COST OF EACH
Game Table	30	$ 8.00

CAPITALIZATION

Total owners equity	154.00
(308 @ .50/ share)	
Cost of materials	166.68
Itemized	
Wood	49.53
Felt	37.81
Stain.	21.83
Dice	10.00
Varnish	12.64
Chips.	25.00
Ink.	9.87
Total -	166.68
Sales Income.	240.00
(30 @ 8.00)	
Owners Equity	154.00
Total -	394.00
Less Cost of Materials.	166.68
Total -	228.68
Less Owners Equity.	154.00
Total -	74.68

Dividend. . . . . $ 74.68 / 308 . . . . . .24/share

Westfield High School INDUSTRIAL ARTS DEPT.

INSTRUCTORS
FRED POSTHUMA
TERRY SQUIER

ENERGY
COMMUNICATIONS
STUDY OF INDUSTRY
MATERIALS & PROCESSES

May 20, 1976

303 THOMAS STREET
WESTFIELD, WI. 53964

Gentlemen;

The students of the Study of Industry class of Westfield High School would like to take this opportunity to invite you to tour our building and see how we learn about industry. Following the tour, we would like to ask you questions about how you operate your industry. We realize that this may be of some inconvenience for you, but after studying about industry, including forming our own company and mass producing a product, we want to know if we simulated a real industry.

We have scheduled Friday, May 28, 1976, at 8:30 A.M. for the tour. The agenda will be as follows: 8:30-9:00 coffee and donuts while seeing a slide series about mass production, 9:00-9:20 tour of the shop and display of mass produced projects, 9:20-9:45 question and answer period.

We are looking forward to seeing you on May 28, however, we will understand if you cannot fit it into your schedule. Enclosed is a list of people in the area that are being invited. We would

like to see someone from management representing your company for several reasons, first, we are proud of our program and would like to show it off. Second, we would like to see if we are getting a true picture of industry. Third, we would like some input into the program from the local industries for you will be the future employers of the students.

Enclosed please find a copy of our course content. Perhaps this will give you a true picture of our program at the present time and will give you some time to think about suggested improvements or comments.

Respectfully,

Terry Squier
Instructor
Westfield High School

Enc.

The production form found in this section were developed by Dr. Douglas Stallsmith, University of Wisconsin-Stout, for the Production System class.

STOCKHOLDERS RECORD

The following are stockholders ______________________________

a Production Systems Company during the months of ______ to ______, 19______

Certified correct by:

____
FINANCE MANAGER

CERTIFICATE NUMBER	DATE	STOCKHOLDER'S NAME	ADDRESS	DIVIDEND CHECK NO.
		272		

MARKETING SALES RECORD

PAGE ____ OF ____

COMPANY NAME: _____

MARKETING MANAGER(S):

_____

_____

QTY.	NAME OF BUYER	BUYER'S ADDRESS	BUYER'S PHONE NUMBER	DATE OF SALE	UNIT PRICE	MONEY DOWN	BALANCE TO PAY	DELIVERED BY & DATE

MASTER BUDGET

Name _____

Date _____ Score

Company: _____

Budget Period: _____

SALES INCOME . . . . . $ _____

EXPENSES:

PRODUCTION EXPENSES

MATERIALS . . . . . $ _____

LABOR . . . . . _____

OVERHEAD. . . . . _____

TOTAL PRODUCTION EXPENSES . . . . . $_____

GENERAL EXPENSES

MARKETING . . . . . $ _____

ADMINISTRATION. . . . . _____

TOTAL GENERAL EXPENSE . . . . . $_____

TOTAL EXPENSES . . . . . $ _____

PROFIT OR (LOSS) BEFORE TAXES . . . . . $ _____

_____
(Company Name)

BREAK-EVEN CHART

PRODUCT: _____ DATE: _____

FIXED COST ---------- $ _____

VARIABLE COST ---------- $ _____

SELLING PRICE PER UNIT ---------- $ _____

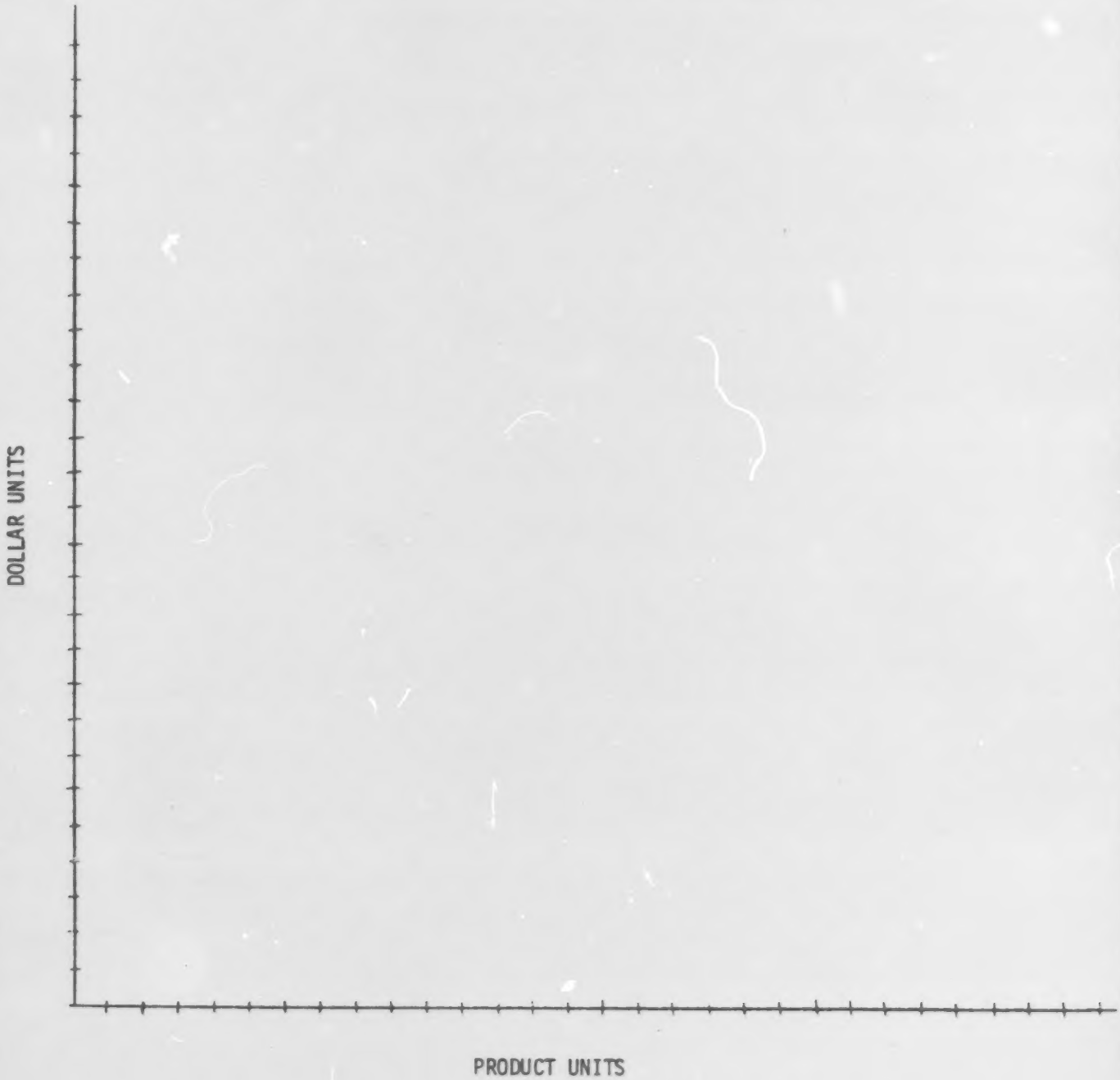

_____
(Company Name)

PROFIT AND LOSS STATEMENT

_____, 19____

NET SALES ---------- $ _____

COST OF GOODS SOLD:

Materials ---------- $ _____

Labor ---------- $ _____

Overhead ---------- $ _____

TOTAL COST OF GOODS SOLD ---------- $ _____

GROSS PROFIT (Or INCOME) ---------- $ _____

LESS: OPERATING EXPENSE:

Research & Development -------- $ _____

Marketing ---------- $ _____

Administrative ---------- $ _____

TOTAL OPERATING EXPENSE ---------- $ _____

GROSS OPERATING PROFIT (Or INCOME) ---------- $ _____

LESS: Depreciation ---------- $ _____

NET OPERATING PROFIT (Or INCOME) ---------- $ _____

ADD: Other Income ---------- $ _____

GROSS INCOME ---------- $ _____

LESS: Interest Expense ---------- $ _____

NET PROFIT BEFORE TAXES ---------- $ _____

LESS: Federal Income Taxes ---------- $ _____

NET PROFIT ---------- $ _____

_____
(Company Name)

BALANCE SHEET AS OF _____, 19____

ASSETS:

Current Assets:

Cash ---------- $_____

Accts. Receivable ---------- $_____

Inventories:

Raw Materials ---------- $_____

In-Process Materials ----- $_____

Finished Goods ---------- $_____

Supplies ---------- $_____

TOTAL CURRENT ASSETS --------- $_____

Fixed Assets:

Product Prototypes --------- $_____

Equipment ---------- $_____

TOTAL FIXED ASSETS ---------- $_____

Other Assets:

$_____

TOTAL OTHER ASSETS ---------- $_____

TOTAL ASSETS --------- $_____

LIABILITIES:

Current Liabilities:

Accts. Payable ---------- $_____

Notes Payable ---------- $_____

TOTAL CURRENT LIABILITIES -------- $_____

Long Term Liabilities:

Bank Mortage ---------- $_____

Bonds ---------- $_____

TOTAL LONG TERM LIABILITIES ------ $_____

NET WORTH (OWNER'S EQUITY):

Preferred Stock ---------- $_____

Common Stock ---------- $_____

TOTAL OWNER'S EQUITY ---------- $_____

TOTAL LIABILITIES & EQUITY ------- $_____

_____
(Company Name)

CAPITALIZATION REPORT

INCOME:

OWNER'S EQUITY ---------- $_____

PRODUCT SALES ---------- $_____

OTHER INCOME ---------- $_____

TOTAL INCOME ---------- $_____

EXPENSES:

COST OF MATERIALS ---------- $_____

LABOR COST ---------- $_____

OVERHEAD COST ---------- $_____

MARKETING ---------- $_____

ADMINISTRATIVE ---------- $_____

RESEARCH & DEVELOPMENT ---------- $_____

OTHER EXPENSE ---------- $_____

TOTAL EXPENSE ---------- $_____

GROSS PROFIT ---------- $_____

LESS OWNER'S EQUITY ------ $_____

NET PROFIT ---------- $_____

TOTAL SHARES OF STOCK ---- _____

DIVIDENDS ---------- $_____ per share

_____ LIQUIDATED AS OF THE _____
(Company Name) (Date)

_____
Financial Manager

MATERIALS RECORD

Company Name: _____ Page _____ of _____

Materials Manager: _____

Qty.	Description of Item	Supplier	Date Req.	Date Ordered	Date Rec'd.	Unit Price	Total Cost

CHANGE ORDER

FROM: _____ TO: _____

CHANGE TO BE INITIATED: _____

_____

_____

_____

_____

REASON FOR CHANGE: _____

_____

_____

_____

_____

_____

_____

DATE INITIATED: _____

INITIATED BY: _____

APPROVED BY: _____

ROUTE SHEET

Company Name: Product:

Prepared By: Part Name:

Lot Size: Part No.:

Date Started: Date Finished: Drwg. No.:

Material Specifications:

Sub-Assembly _____ Assembly _____

Event No.	Description of Event	Machine or Bench	Tool, Jig, or Fixture

WORK ORDER

MACHINE:	DETAILED OPERATIONAL PROCEDURES:
OPERATION NO.:	
PART NAME:	
DRWG. NO.:	
JIG/FIXTURE NO.:	OPERATOR'S NAME / NO. PROD. / NO. REJECTS / TIME
TOOL TO BE USED:	IN / OUT
NO. OF PCS.:	IN / OUT
MATERIAL SPECIFICATIONS:	IN / OUT
	IN / OUT
	IN / OUT
	IN / OUT
PREVIOUS WORK STATION:	IN / OUT
NEXT WORK STATION:	IN / OUT
SET-UP TIME:	IN / OUT
TIME PER PIECE:	IN / OUT
REMARKS:	IN / OUT
	IN / OUT
	IN / OUT
	IN / OUT
FILLED OUT BY:	IN / OUT
	IN / OUT

JIG AND/OR FIXTURE DESIGN

Designer's Name: _____ Date: _____

Product: _____ Part Name: _____

Drwg. No.: _____ Part No.: _____ Operation No.: _____

Jig/Fixture No.: _____ Machine: _____ Tool: _____

Explain the function of the jig/fixture:

MATERIALS NEEDED TO BUILD THE JIG/FIXTURE

QTY.	ITEM DESCRIPTION	SIZE	AVAILABLE	ORDERED	COST

Approvals Needed:

Before you make: _____ Date: _____
Production Manager

After you make: _____ Date: _____
Quality Control

* Sketch the jig/fixture on the back of this sheet. Isometric drawing with dimensions and specifications.

WORK STATION DESIGN

OPERATION NO.: _____ PART NAME: _____

MACHINE: _____ PART NO.: _____

BENCH: _____ NUMBER OF OPERATORS: _____

DESCRIPTION OF OPERATION: _____

_____

_____

SCALE: _____ DRAWN BY: _____

LEFT-HAND/RIGHT-HAND CHART

PRESENT METHOD: _____ PROPOSED METHOD: _____

OPERATION: _____ OPERATOR'S NAME: _____

DEPT.: _____ PART NAME: _____ PART NO.: _____

DRAWN BY: _____ DATE: _____ PAGE _____ OF _____

LEFT HAND	TIME		SYMBOLS		TIME	RIGHT HAND

TIME STUDY SHEET

OBSERVER'S NAME: _____ DATE: _____

OPERATOR'S NAME: _____ OPERATION NO.: _____

PART NAME: _____ PART NO.: _____

MACHINE: _____

ELEMENTS	READINGS IN WORK CYCLES 1	2	3	4	5	6	7	8	9	10	AVERAGE TIME
1.											
2.											
3.											
4.											
5.											
6.											
7.											
8.											
9.											
10.											
11.											
12.											

FOREIGN ELEMENTS:	TOTAL TIME PER CYCLE	
LEVELING FACTOR: Below Average - 90% Average ------- 100% Above Average - 110%	RATING FACTOR	
	ADJUSTED TIME	
ALLOWANCE FACTOR: Fatigue, Personal, Preparation, Delays	TOTAL ALLOWANCE	
REMARKS:	STANDARD TIME	

QUALITY CONTROL DESIGN SHEET

Designer's Name: _____ Date: _____

Product: _____ Part Name: _____

Part No.: _____ Drwg. No.: _____ Inspection No.: _____

Explain function of the inspection gauge:

MATERIALS NEEDED TO BUILD THE GAUGE

QTY.	ITEM DESCRIPTION	SIZE	AVAILABLE	ORDERED	COST

Approvals Needed:

Before you make: _____ Date: _____
Production Manager

After you make: _____ Date: _____
Quality Control

* Sketch the inspection gauge on the back of this sheet. Isometric drawing with dimensions and specifications.

QUALITY CONTROL WORK ORDER

Inspection No.: _____ Part Name: _____

Drwg. No.: _____ Part No.: _____ Tolerance: _____

Finished dimensions, shape, finish, etc.	Inspection Gauge or Instrument:

Inspection Procedure:	Inspector	Time
		IN OUT
		IN OUT
		IN OUT
		IN OUT
		IN OUT
No. Inspected: _____		IN OUT
No. Rejects: _____		IN OUT
No. Reworkable: _____		IN OUT
		IIN OUT
		IN OUT
		IN OUT
		IN OUT
		IN OUT
		IN OUT
		IN OUT
		IN OUT
		IN OUT
		IN OUT
		IN OUT

INSPECTION TAGS

Name _____

Date _____ Score _____

REWORK

DIRECTIONS _____

_____

_____

SIGNED _____

REJECT

REASON _____

_____

_____

SIGNED _____

REWORK

DIRECTIONS _____

_____

_____

SIGNED _____

REJECT

REASON _____

_____

_____

SIGNED _____

_____
(Company Name)

PURCHASE REQUISITION

INSTRUCTIONS:

1. Fill out in triplicate.
2. Obtain approvals.
3. Submit to Materials Manager.

REQUISITION NO.: _____

PRODUCT: _____

DEPARTMENT: _____

REQUESTED FROM: _____

DEPT. FOREMAN APPROVAL: _____

PRODUCTION MANAGER APPROVAL: _____

OFFICE OFFICE USE ONLY

ORDER NO.: _____

DATE REC'D.: _____

APPROVAL: _____
MATERIALS MANAGER

APPROVAL: _____
FINANCE MANAGER

QTY.	ITEM DESCRIPTION	RECOMMENDED SOURCE	COST PER UNIT	TOTAL COST

TOTAL COST ------- $ _____

_____
(Company Name)

PURCHASE ORDER

PURCHASE ORDER NO.: _____ DATE: _____

SUPPLIER:

SHIP AND BILL TO:

_____

PRODUCTION SYSTEMS CLASS
221 APPLIED ARTS BUILDING
UNIV. OF WISCONSIN-STOUT
MENOMONIE, WISCONSIN 54751

QTY.	CATALOG NUMBER	ITEM DESCRIPTION	COST PER UNIT	TOTAL COST

TERMS: _____

TOTAL COST --- $_____

F.O.B.: _____

INVOICE NO.: _____

DELIVERY DATE: _____

AUTHORIZATION:

FINAL APPROVAL BY: _____
INSTRUCTOR

_____
FINANCE MANAGER

_____
(Company Name)

MATERIALS RECEIVING REPORT

To Financial Manager: _____, 19____ Order No.: _____

Materials Received: _____, 19____ Report No.: _____

Materials Received From: _____

QTY.	DESCRIPTION	COST PER UNIT	TOTAL COST
		Total Cost -------	$_____

Signed: _____ Date: _____
Materials Manager

Page _____ of _____

FINANCIAL JOURNAL

Company Name: _____

Finance Manager: _____

Entry Date	Item Description	Account Classification	Purchase Order No.	Debit	Credit	Balance

SALES ORDER FORM

Buyer's Name: _____ CUSTOMER COPY

Address: _____

_____

Phone No.: _____

Quantity	Name of Item	Unit Price	Total Sales
		$	$
		Tax	$ _____
		Total	$
Salesperson: _____		Minus Downpayment	$ _____
Date Delivered: _____		Balance Due	$

SALES ORDER FORM

Buyer's Name: _____ SALESPERSON COPY

Address: _____

_____

Phone No.: _____

Quantity	Name of Item	Unit Price	Total Sales
		$	$
		Tax	$ _____
		Total	$
Salesperson: _____		Minus Downpayment	$ _____
Date Delivered: _____		Balance Due	$

RESOURCES:

Ready access to securing resources in developing an industrial education program are invaluable.

The resources included in the following section of the handbook include guides, texts, journals, educational games and simulations, companies and people.

The resources that are included are not meant to be all inclusive but rather were selected to get the curriculum developer off and running.

REFERENCES

1. Occupational Manuals and Projects
   in Marketing (series of 11 manuals)
   Gregg Division
   McGraw-Hill Book Co., New York, NY
   Antrim, William - Advertising, 1970
   Buckner, Leroy - Customer Services, 1971
   Dorr, Eugene & others - Buying & Pricing, 1971
   Ely, Vivien - Organization for Marketing, 1971
   Ernest, John - Basic Salesmanship, 1969

2. Product Planning: An Integrated Approach
   by Merlin Stone - 1976
   John Wiley and Sons
   New York, N.Y.

3. Selecting Advertising Media
   by Harvey Cook, 1969
   Small Business Management
   Series #34
   Small Business Administration
   Washington, D.C.

4. New York Stock Exchange
   11 Wall Street
   New York, NY 10005
   Portfolio of Teaching Aids including:
   Understanding Financial Statements
   Handbook of Common Stocks
   Understanding Bonds and Preferred Stocks
   NYSE Common Stock Index (chart)
   How an Order is Executed (chart)
   Teachers Guide

5. Organization for Marketing
   by Vivien Ely, 1971
   McGraw-Hill Book Co.
   New York, NY

6. How Things We Use Are Made
   by Shirley Chilton, Roy Chilton
   and Robert Chilton, 1970
   Elk Grove Press
   Los Angles, CA
   This book gives an overvies of corporations for elementary school children.

7. New Products - Design to Completion
   ASTME Education Department
   American Society of Tool and Manufacturing Engineers, 1967
   Dearborn, Michigan
   Selecting a Product

8. Management of New Products
1968
Booz, Allen and Hamilton
New York, NY

9. Finding a New Product for Your Company
by John Lang, 1972
Small Business Administration
Management Aids #216
Washington, D.C.

10. Product Planning Simplified
1972
American Management Association, Inc.
New York, NY

11. New Product Development
Editors: Eastlack, J.O., Tinker, Jack
1968
American Marketing Association
New York, NY

12. Common Body of Knowledge for Management Consultants,1957
Association of Consulting Management Engineers, Inc.
New York, NY

13. Industrial Organization and Management
by Lawrence Bethel, Franklin Atwater, George Smith, Harvey STackman and James Riggs
Fifth Edition 1971
McGraw-Hill Book Co.
New York, NY

14. Manufacturing Organization and Management
by Harold Amrine, John Ritchey, and Oliver Hulley
Second Edition, 1966
Prentice-Hall, Inc.
Englewood Cliffs, NJ

15. An Introduction to American Business
by Mauser and Schwartz
Harcourt, Brace and World
General content covering: all elements of the business enterprise.

16. Work: Pathway to Independence
by Bill Gooch, Lois Carries, and John Huck
1979
American Technical Society
Chicago, IL

17. Manufacturing Forum for Industrial Educators
published tri-annually
Department of Industrial Education and Technology
Ball State University
Muncie, Indiana 47306
A publication written by teachers to promote the enterprise approach to teaching of the elements of industry published and sold for $3.00 yr.

18. Contemporary Business
by Louis Boone and David Kurtz, 1978
Holt, Rinehart, and Winston
General Content covering all the elements of industry

19. Individualize Related Instruction for Succeeding in the World of Work
Grady Kimbrell, Ben Vineyard
McKnight Pub. co.
Bloomington, IL
A workbook that looks at the world of work in an individualize approach to include job attitude, your lifestyles and your work, exploring careers through your part time job, applying for a job, employer, employee and co worker relationships and others.

20. The World of Manufacturing Industrial Arts Curriculum Project
1971
McKnight and McKnight Publishing Co.
Bloomington, IL
Text and workbook studying the areas of manufacturing

21. Activities of Industry, Simulated in Education
Rex A. Nelson
Lewis R. Selvidge, Jr.
VOG Publishing Co.
Electro-Litho Printing
104 PEG-WEN
Statesboro, GA 30458
1973
This soft cover text is designed to present brief but basic descriptions of the activities are as functions, and sub functions of a company. There are numerous company forms that may be of value in the enterprise.

22. Experiencing the Free Enterprise System Through Industrial Arts
1974
compiled by Roy S. Hinrkhs
Associate Professor
Mississippi State University
Publisher: Research and Curriculum, Unit for Vocational Technical Ed
DX, Mississippi State, Mississippi 39762
An outstanding 141 page soft cover book designed to provide information and guidelines necessary to develop a knowledge and understanding of industry.

23. The Wisconsin Guide to Local Curriculum Inprovement in Industrial Education
K-12, Bulletin No. 7070, 1978
Department of Public Instruction
Madison, Wsiconsin 53702

24. Manufacturing
Thomas Wright
Thomas Jensen
The Goodheart Willcox Company, Inc.
South Holland, Illinois
1976, An outstanding 336 page hardbound text book thatcovers the elements of manufacturing under two broad catogories of materials and processing and management.

25. An Introduction to Manufacturing Careers
Willis E. Ray
McKnight Publishing Co.
Bloomington, IL 61701
1975, A 125 page book, soft cover text that is designed to aid the students in the set-up and operation of enterprise.

26. Job Attitudes - Vocational Series Student's Workbook
Perceptual Development Laboratories
Big Spring, TX

27. Level One American Industry Instructor's Guide, Part 1 and 2
American Industry Project
Stout State University
Menomonie, WI 54751
USDE Contract #OE-5-85-060

28. Occupational Outlook Handbook
U.S. Superintendent of Documents
Department of Labor, Bureau of Labor Statistics,
U.S. Governement Printing Office

29. Manufacturing: Industry and Careers
by Harvey R. Dean
Prentice-Hall, Inc.
Englewood Cliffs, NJ
Describes the aspects common to all manufacturing industries. You will
30. understand how companies are organized and managed. A study of the various areas in this field will prove helpful when making a career decision.

30. The History, Economics, and Impact of Technology and American Enterprise
Gould Inc.
10 Gould Center
Rolling Meadows, IL 60008
(312) 640-4100
Activity masters and a teacher's guide trace the role of technology over the course of human history.

31. Manufacturing
Education Development Center, Inc.
55 Chapel Street
Newton, Maryland 02160
Teacher resource book on manufacturing for elementary grades.

32. Industrial Education Instructional Materials Center
University of Wisconsin - Stout
Menomonie, Wisconsin 54751
Instructional Material List

33. Drawing-for Product Planning
by George E. Stephenson

34. Jigs and Fixtures for Limited Production
Harold Sedlik
Society of Manufacturing Engineers
Dearbor, Michigan
1970, An excellent book that explains the use of jigs and fixtures, principles and gives practical examples.

35. Quality Control
Buffa, Elwood S.
Richard D. Irwin
Homewood, IL
1973

36. Power Technology
George E. Stephenson, 1973
Delmar Publishers
Mountainview Avenue
Albany, New York 12205
A study of inventions which convert energy into work.

37. Power: Mechanics of Energy Control
Ralph C. Bohn
Angus J. MacDonald
McKnight and McKnight
Bloomington, IL
A complete overview of the use and control of power in home and industry.

38. Wood Technology
Southwest Missouri State University

INDUSTRIAL EDUCATION INSTRUCTIONAL MATERIALS CENTER

Industrial Teacher Education Dept.
418 Harvey Hall

University of Wisconsin-Stou
Menomonie, WI 54751

ORDER FORM

Order No.	Title	Price	Total
*INDUSTRIAL EDUCATION:			
74-1	Overview of Industrial Education	$ 1.20	____
75-20	Introduction to a Capstone Program	1.00	____
75-25	Examples of Learning Tasks Appropriate to GUIDE	1.00	____
75-26	Problem Solving Activities-Set I	2.00	____
75-38	Problem Solving Activities-Set II	2.00	____
*ENTERPRISE & INDUSTRY			
74-2	An Introduction to Research and Development	1.20	____
74-3	Introduction to Production	1.25	____
74-4	The Development of Industry	1.00	____
74-5	An Overview of Marketing and Distribution	1.25	____
74-6	Maintenance and Services	1.25	____
74-7	Getting to Know Materials	1.40	____
74-8	Let's Study Finance	1.45	____
74-11	Communications Between Society and Industry	1.10	____
74-13	How Does Industry Use Management	1.40	____
74-14	Interviewing for a Job	1.40	____
75-15	Human Resources	1.10	____
75-16	What is Property?	1.35	____
75-18	How Does Management Affect Society and Industry	1.35	____
75-19	Early Lumbering	1.00	____
75-22	Proposed Curriculum for a Course in the Metals Industries	1.25	____
75-23	Mass Production Activities	1.00	____
75-27	The Enterprise-I	1.40	____
75-32	The Enterprise-An Alternative Delivery System	1.65	____
75-36	The Enterprise-II (script, filmstrip, tape)	15.30	____
75-37	Overhead Transparency Masters for Each of the Eleven Elements of Industry	2.00	____
78-11	The Management Game	6.00	____
78-26	Unit Plan: Enterprise	4.20	____
*COMMUNICATIONS			
74-10	What Is Communications?-I	1.60	____
75-21	Geometric and Positional Dimensioning	1.60	____
75-28	The Development of Communications-I	1.00	____
75-34	The Development of Communications-II (script, filmstrip, tape)	15.30	____
75-35	What is Communications?-II (script, filmstrip, tape)	15.30	____
78-3	Operating the Roneotronic Stencil Cutter	4.00	____
78-4	Operating the AB Dick 217 Duplicator	2.90	____
78-5	Operating the Gestetner Stencil Duplicator	4.40	____
78-42	Keep America Clean-Utilize Our Waste	2.20	____
78-44	Auxiliary Views	2.20	____
78-53	Screen Printing	6.60	____
79-14	Developing Your 35 MM Film-It's Easy and Fun	2.50	____
79-20	Determining Halftone Exposures	3.25	____

*CAREER EDUCATION

74-9	Analyzing a Career	1.00
74-12	Occupations in Communications	1.00
75-29	Career Planning	1.00
75-30	Co-op Program	1.10

*POWER AND ENERGY

75-17	Power and Energy	1.35
75-33	Auto Suspension, Braking & Steering Systems	1.10
78-27	Starter Kit: Oil	2.00
78-28	Starter Kit: Oil Shale	2.00
78-29	Starter Kit: Solar	2.00
78-30	Starter Kit: Nuclear	2.00
78-31	Starter Kit: Coal	2.00
78-32	Starter Kit: Gas	2.00
78-33	Starter Kit: Wood	2.00
78-34	Starter Kit: Hydro	2.00
78-35	Starter Kit: Wind	2.00
78-36	Starter Kit: Geothermal	2.00
78-37	Starter Kit: Tidal	2.00
78-43	Front Wheel Bearings	4.50
78-46	Automobile Lube Service	3.50
79-19	Dynamometer Types, Horsepower & Torque	2.50
79-21	Ignition System & Tune Up	3.50
79-25	Using Electricity for Illumination	2.50
79-26	Troubleshooting and Servicing the H.E.I. System	2.50
79-32	Adjusting Valve Clearance on a Valve-in-Head Diesel Engine	1.00
79-33	To Build an Audio Oscillator	1.00

*MATERIALS & PROCESSES

78-1	Arc Welding	1.70
78-2	Operating a Metal Lathe	2.90
78-39	Metal Casting-Making a Green Sand Mold (slides, script)	14.50
78-40	Measuring with the Micrometer	1.50
78-41	Grinding a Tool Bit	1.50
78-45	Abrasive Paper	3.50
78-47	Figuring Board Feet	2.40
78-48	Moisture Content and How to Determine It	3.00
78-49	Sand Testing	2.50
78-50	Crosscutting for the Tablesaw (slides, script)	5.00
78-51	The Wood Squaring Process (slides, tape, script)	12.00
78-52	Metal Identification	3.00
79-1	Vacuum Mould	1.00
79-13	The Portable Circular Saw	1.50
79-15	The Engine Lathe	2.75
79-16	The Horizontal Band Saw	2.10
79-17	Cutting a "V" Thread	3.50
79-18	The Jointer	2.75
79-22	How to Sharpen Lathe Tools	3.25
79-23	Decoupage	2.25
79-24	Setting Up Oxy-Acetylene Welding Equipment	3.00
79-27	How to Use the Rockwell/Delta Wood Lathe	3.50
79-28	The Sharpening of a Hand Plane	2.25
79-29	Hamburger Press (project plan)	1.25
79-30	Tool Box Project Plan	1.00
79-31	Picnic Container and Seat (project plan)	1.00
79-34	Introduction to Sheet Metal	3.50
79-35	Refinishing Wood Products (script, slides)	22.00

306

*ELEMENTARY SCHOOL INDUSTRIAL ARTS: (STUDENT PROJECTS)

A. GENERAL

75-24	Example Elementary Unit	1.20	_____
75-31	Industry for Elementary Grades	1.00	_____

CONSTRUCTION PLANS FOR: (B & C)

B. PRE-SCHOOL AND LOWER ELEMENTARY

78-14	Rainbow Spinner	1.00	_____
78-15	Slapboard	1.00	_____
78-16	Rhythm Sticks	1.00	_____
78-17	Ring Toss Game	1.00	_____
78-18	Wooden Puppet	1.00	_____
79-2	Basic Shape Templates	1.00	_____
79-3	Bolt Board	1.00	_____
79-4	Fractional Aid	1.00	_____
79-5	Jig Saw Puzzle	1.00	_____
79-6	Number Puzzles	1.00	_____
79-7	Sanding Blocks	1.00	_____

C. UPPER ELEMENTARY AND MIDDLE SCHOOLS

78-19	Jumping Ring	1.00	_____
78-20	Model Wind Generator	1.00	_____
78-22	Sailboat	1.00	_____
78-23	Covered Wagon	1.00	_____
78-24	Circuit Board	1.00	_____
78-25	Paper Recycling	1.00	_____
79-8	Fraction Box	1.00	_____
79-9	Plant Flat	1.00	_____
79-10	Race You to 18 Game	1.00	_____
79-11	Transportation Model Truck Cab and Trailer	1.00	_____
79-12	Truck	1.00	_____

SPECIAL OFFER: ORDER COMPLETE SET FOR ONLY:

$290.00

Total Page 1: $_____

+ Total Page 2: $_____

+ Total Page 3: $_____

= TOTAL ORDER: $_____

NAME _____

SCHOOL _____

ADDRESS _____

City *State* *Zip*

(Please enclose purchase order or check for correct amount made out to:

I.E. INSTRUCTIONAL MATERIALS CENTER. Thank You

(Phone: 715-232-1367 or 1311)

PRICES EFFECTIVE THROUGH AUGUST 31, 1980.

TRANSPARENCIES FOR INDUSTRIAL ENTERPRISE

I. D.C.A. Introduction to American Industry
available through PITSCO
96:60

II. American Industry Transparencies Set
available through University of Wisconsin - Stout
American Industry Office

III. Elements of Industry Transparency Masters for eleven concepts
75-37 I.E. Instructional Materials Center
University of Wisconsin - Stout
1.90

IV Manufacutring Transparency Masters
Thomas Wright
Department of Industrial Education
Ball State University
Muncie, Indiana 47306
6.00

RESOURCE PERSONS

Doug Stallsmith
Business and Industrial Management
University of Wisconsin - Stout
Menomonie, Wisconsin 54751
(715) 232-1579

Robert Hendricks
Wild Rose High School
600 Park Avenue
Wild Rose, Wisconsin 54984
(414) 622-4201

Terry J. Squier
Oak Creek High School
340 East Puetz Road
Oak Creek, Wisconsin 53154
(414) 762-8000

Michael A. Hopfensperger
Wilson Junior High
225 North Badger Avenue
Appleton, Wisconsin 54911
(414) 735-6126

Bruce Barnes
Oak Grove Junior High
1300 West 106th Street
Bloomington, MN 55431
(612) 884-7435

Bob Kulla
Westfield High School
Westfield, Wsiconsin 53964

John Dombrowski
Urban Junior High
Sheboygan, Wisconsin

Roger Imhoff
Washington Junior High
2101 Division Street
Manitowoc, Wisconsin 54220

Harry Olstad
Industrial Teacher Education
University of Wisconsin - Stout
Menomonie, Wisconsin 54751
(715) 232-2174

FILMS FOR INDUSTRIAL ENTERPRISE - FREE LOAN

TITLE	SOURCE
1. The Awesome Servant	Amalgamated Meat Cutters
2. Commitment	Western Electric Co.
3. Each Day at Dawn	Modern Talking Film
4. Faces of a New Foundry	General Motors
5. Getting More Out of a Minute	Kearney and Trucker
6. Knowing's Not Enough	United States Steel Corp.
7. Paths of Steel	United States Steel
8. Pontiac Pours it ON	General Motors
9. Quality and Cost	Kearney and Trucker
10. The Road Ahead	West Glenn Films
11. The Story of Human Enterprise	Georgia Pacific
12. This is Automation	Amalgamated Meat Cutters
13. Tools That Shaped America	Grinding Wheel Institute
14. Mission Technology	Bureau of Mines
15. Wealth Out of Waste	Bureau of Mines
16. Art of Making Furniture	Sterling Films
17. Freedom by Design	Sterling Films
18. Wood at Work	American Wood Preservative
19. Big City Newspaper	Chicago Tribune
20. Paper: Messenger of Mankind	Chicago Tribune

TITLE	SOURCE
21. The Nations Business	Sterling Films
22. Electrostatic Painting	Dansbury Corp.
23. Don't Push Your Luck	Prevent Blindness Association
24. Design With a Purpose	Sterling Films
25. The Climber	General Motors Film Library
26. Fences and Gates	General Motors Film Library
27. One Hoe for Kalabo	Department Machine Tool Bureau M.T.
28. Communications Expansion	Union Carbide M.T.
29. Think of It as Money	National Bank M.T.
30. Assignment Service	U.S. independent Tele. Co. M.T.
31. The Oxy-Acetylene Flame Melter of Metals	Bureau of Mines
32. The Worth of Waste	General Motors
33. Cast a Giant Shadow	American Foundryman Soc. M.T.
34. In Small Packages	Toyota Motors M.T.
35. Consolidated Cares	Consolidated Paper
36. The American Way	Department of Transportation
37. The Silent Guardians	Underwriters lab
38. Dual with Fire	Underwriters Lab
39. The Torture Testers	Underwriters Lab
40. It's Only Money	Association Sterling Films

TITLE	SOURCE
41. Firestone: Many Faces Many Meanings	Firestone
42. A Special Responsibility	Pitney Bowes Association Films
43. Commitment to Safety	Association Films
44. Report to Sonsumers	Montgomery Wards
45. Training the Construction Worker	Laborers AGC, Educ. and Training
46. The San Diego Experience	Aluminum Co. of America
47. If You Don't Come in Sunday... Don't Come in Monday	Amalgamated Meat Cutters
48. Made in Japan	Amalgamated Meat Cutters
49. The Unexpected	West Glenn Films
50. Lead in Motion	Lead Industries Association Films
51. Standards for Excellence	Bureau of Standards Association
52. Hart Ski Story	Hart Ski Co.
53. We Used to Call It Printing	Dupont Co.
54. Pursuit for the Car of Tommorrow	Modern Talking Co.
55. A Question of Balance	Modern Talking Co.
56. Shaping Progress	General Motors
57. Making the Difference	General Aviation Modern Talking
66. Phillips Petroleum Series on Understanding Americas Economic History Land #31150 People #31151 Innovation #31152 Organization #31153 Government #31154	
The Factory-How a Product is Made (1957) -color, 14 min., follows a simple toy from the planning board, through steps of manufacturing to its sale in a retail store	BFA Educational Media 2211 Michigan Avenue Santa Monica, CA 90404
Body Builders - color, 26 min., concise behind the scenes story of the designing building & testing of auto body	General Motors Corp. 3044 West Grand Blvd. Detroit, MI 48238

ADDRESSES FOR FILMS

Chicago Tribune
Tribune Tower
Chicago, IL 60611

Modern Talking Pictures Service
Film Scheduling Center
2323 New Hyde Park Road
New Hyde Park, NY 11040

U.S. Department of Interior
Bureau of Mines
4800 Forkes Avenue
Pittsburgh, PN 15213

West Glenn Films
565 Fifth Avenue
New York, NY 10017

Association Films
866 Third Avenue
New York, NY 10022

Amalgamated Meat Cutters
Department of Education
2800 North Sheridan Road
Chicago, IL 60657

Western Electric Co.
Motion Picture Bureau Rm. 1626
New York, NY 10007

Modern Talking Pictures
9129 Lyndale Avenue South
Minneapolis, MN 55420

General Motors Corp.
Public Relations Staff
General Motors Building
Detroit, Michigan 48202

Kearney and Trecker Corp.
Adv. Department
11000 Theodore Treker Way
Milwaukee, Wisconsin 53214

United States Steel
Chicago Film Center
208 South LaSalle Street
Chicago, IL 60690

West Glenn Films
565 Fifth Avenue
New York, NY 10017

Georgia Pacific Corp.
Educational Film Library
900 SW Fifth Avenue
Portland, Oregon 97204

Hart Ski Manufacturing Co.
630 Pierce Butler Road
St. Paul, MN 55104

Grinding Wheel Institute
2130 Kieth Building
Cleveland, Ohio 44115

Du Pont DeNemours and Co. Incorp.
Motion Picture Section
Adv. Dept.
1007 Market Street
Wilmington, Delaware 19898

Gilman Engineering and Mfg. Co.
305 West Delavan Drive
Janesville, Wisconsin 53545

Bethlehem Steel
Modern Talking Pictures

U.S. BUREAU OF MINES--MOTION PICTURE

REFUSAL NOTICE

Your request for film(s) indicated below could not be filled for the reason specified:

Refusal reason*		
( )	178.	Arizona and Its Natural Resources
( )	192.	Heat and Its Control
( )	216.	Texas and Its Natural Resources
( )	225.	The Story of the Modern Storage Battery
( )	226.	California and Its Natural Resources
( )	229.	The Story of Gasoline
( )	233.	Nevada and Its Natural Resources
( )	235.	The Story of Lubricating Oil
( )	238.	The Oxy-Acetylene Flame--Master of Metals
( )	242.	Oregon and Its Natural Resources
( )	245.	Lead From Mine to Metal
( )	246.	Washington and Its Natural Resources
( )	248.	Idaho and Its Natural Resources
( )	249.	The Petrified River--The Story of Uranium
( )	251.	Rubber From Oil
( )	253.	Asbestos...a Matter of Time
( )	254.	Alaska and Its Natural Resources
( )	255.	The Magic of Sulphur
( )	256.	Copper, the Oldest Modern Metal
( )	257.	The World of Phosphorus
( )	258.	A Stretch of Imagination
( )	259.	Cast Iron--The Biography of a Metal
( )	261.	Aluminum: Metal of Many Faces
( )	262.	The Extraordinary World of Zinc
( )	263.	Steelmaking Today
( )	264.	The Lead Matrix
( )	265.	Silver
( )	266.	Mine Fire Control
( )	267.	Wealth of the Wasteland
( )	268.	Tennessee and Its Natural Resources
( )	269.	First Aid Now
( )	270.	Fahrenheit 3300
( )	271.	The Minerals Challenge
( )	272.	Pennsylvania and Its Natural Resources
( )	273.	The Moving Earth--A Story of Mined Land Subsidence Control
( )	274.	Wealth Out of Waste
( )	275.	Tungsten
( )	276.	Mission: Technology
( )	_____	
( )	_____	
( )	_____	
( )	_____	

*Explanation of Numerical Refusal Codes.

1. Not available: (a) current school year. (b) until _____
2. Substitution has been made. If this is not satisfactory, please advise.
3. Permanently withdrawn from circulation by sponsor.
4. Replaced by: _____

20056

GAMES AND SIMULATIONS

PRESENTED AT

THE TWENTY-FIFTH ANNUAL INDUSTRIAL EDUCATION CONFERENCE

PRESENTED AT

ROBERT W. HENDRICKS

GAMES AND SIMULATIONS IN INDUSTRIAL ARTS EDUCATION

Industrial Arts teachers throughout the state of Wisconsin are being challenged by the Wisconsin State Guide To Improving Instruction In Industrial Arts to develop and implement programs that reflect modern industry. Efforts to implement the guide have resulted in many new concepts being introduced via Industrial Arts classes. Concepts such as Research and Development, Management and Finance are beginning to play an important part in a students overall understanding of industry.

It is important that we integrate these concepts into our classes and do it through the active involvement of our students. Concepts such as Management, Relationships, etc., should not be dealt with solely through lectures and text assignments. Games and simulations are an excellent method of introducing new concepts in Industrial Arts classes and maintaining high school students interest and active student involvement.

Games and simulations have seen tremendous growth in the education field in the last ten years. The terms, games and simulations are often used simultaneously, however, there does exist a difference between the two. A game introduces the element of chance into play, whereas the simulation does not. While the outcome in a game may be affected by the spin of a dial or the throw of dice, the simulation uses a logical predetermined table or chart to evaluate student decision making.

It has been my experience in using games and simulations that student motivation is greatly increased in a game or simulation situation.

Students, as well as the general public, enjoy palying games. Games and simulations present the student with a challenging and realistic view of situations that take place in industry. Games and simulations also offer both instructor and student a change of pace from traditional methods.

The most valuable aspect of simulations, in my opinion, is the group decision making process students go through. We often talk about the student-directed enterprise and I think that simulations help students prepare for that enterprise. Students need practice in making group decisions and carrying out those decisions in the enterprise experience, and the simulation gives students the practice.

Listed in the following pages are selected games and simulations that could be used in Industrial Arts classes.

1. Stock Market Game
Shows how Stock Market works particularly how prices rise and fall.
The Avalon Hill Co.
4517 Harford Road
Baltimore, Maryland 21214

2. Stockmarket
Teaches fundamentals of Stock Market 6.98
Jasper M. Rowland
1545 Harmony Road
Alcorn, Ohio 44313

3. Venture
Develops practical understanding of business operations
The Proctor and Gamble Co.
Cincinatti, Ohio 45201

4. Bux
Teaches concepts of R & D, Finance, Inventroy, Sales, Advertising 3.00
Simile II
P.O.Box 1023
LaJolla, CA 92037

5. Management
Introduction to real management situations. 5.98
The Avalon Hill Co.
4517 Hartford Road
Baltimore, Maryland 21214

6. Collective Bargaining
Simulates labor-management contract disputes 1.90
Scientific Research Assoc.
259 East Erie Street
Chicago, IL 60611

7. New City Telephone Co. Simulation
Students role play various business executives and must make decisions in relation to stated goals. 10.00
Simile II
P.O.Box 1023
La Jolla, CA 92037

8. Managing the Worker
Creative Studies Simulations
Macmillian Co.
866 Third Avenue
New York, NY 10022

9. Simulation Series for Business and Industry
Science Research Association
259 East Erie Street
Chicago, IL 60611

10. B.M.G.
Students learn about price, production, advertising, competition, and selling.
Western Behavioral Science Institute
1150 Silverado
La Jolla, CA 92037

11. Economic System
Simulation deals with economic interrelationships of economic system, manufacturers, workers and farmers who try to advance profits. $25.00
Western Publishing Co. Inc.
School and Library Department
850 Third Avenue
New York, NY 10022

12. Economic Decision Games
Purpose is to analyze and solve economic problems.
Includes eight games: The Market, The Firm, Collective Bargaining, The Community, Scarcity and Allocation, The
The National Economy and International Trade
Science Research Association
259 East Erie Street
Chicago, IL
or
Didactic Systems Inc.
P.O. Box 500
Westbury, Long Island, NY 11590

13. Free Enterprise
Students assume various roles in corporation and make decisions
Instructional Innovations
Redlands, CA

14. Labor VS. Management
Social Education Magazine
Oct. 1966
421-422 John D. Gearoin

15. Sender Reciever Game
Students get experience in sending message
McKnight Publishing Co.

16. Electronic Bingo
Bingo using electronic symbols rather than numbers
Industrial Arts Supply Co.
5724 West 36th Street
Minneapolis, MN 55416

17. Pollution
Students role play as businessmen, industrialists, residents, etc., and compete to solve common problems
Game Central
55H Whaller Street
Cambridge, Mass 02138

18. A Look at our Environment
Students confront various pollution problems and analyze values.
Educational Ventures
209 Court Street
Middletown, Conn 06457

19. Game-Sim Series I
A large collection of games, simulations and activities in many areas of which the following seem most related to Industrial Arts, Engineering, Communications, Transportation, Construction and Manufacturing
California Learning Simulations
750 Lurline Drive
Foster City, CA 94404

20. Market
Study of supply and demand
Digital Equipment Corp.
146 Main Street
Maynard, Mass 01754

21. Toolo
type game for hand tool identification
A study of the Developing of Simulation Games Related to Industrial Arts
A plan B paper by William Ecker located in Stout Library, Menomonie, WI 54751

22. The Man Made World
A variety of Games, Simulations and Activities related to Industry and Technology.
Engineering Concepts Curriculum Project
College of Engineering and Applied Sciences
State University of New York at Stony Brook
Stony Brook, NY 11794

23. Environmental Related Games
Games and activities related to environmental problems
Environmental Research Packet Project
Department of Physics and Astronomy
University of Maryland
College Park, Maryland

24. Esso Student Business Game 5.50
C.R.A.C.
Bateman Street
Cambridge, England

25. Transaction: The Wall Street Game
Excellant teaching of the workings of the stock market
Study-Craft Educational Products
R.I.
683 Tussar Research Center
Belle Chasse, LA 70037

26. Collective Bargaining
Advanced study of Labor Relations, five participant set, 17.50
Science Research Association
259 East Erie ST.
Chicago, IL 60611

27. Production Scheduling Management Game
Advanced scheduling problems 17.50
Didactic Systems Inc.
6N Union Avenue
Cranford, NJ 07016

28. Production
Study of basic elements of production
Good Time Educators
Bob Reinke
Route 2
Monticello, MN 55302

29. Trade and Development 4.00
Academic Games Association
430 East 33rd Street
Baltimore, MD 21218

30. Strike
The Macmillan Co.
866 Third Avenue
New York, NY 10022

31.. The Nationalization Game
Industry Week Magazine, Feb. 10, 1975
Upper level game deals with affect of governement intervention into industry.

32. The Management Game 78-11
1.90 Industrial Education Instructional Material Center
University of Wisconsin - Stout

33. Computerized Collective Bargaining
$20.00 Industrial Education Instructional Material Center
University of Wisconsin - Stout

34. Profit and Loss
The skill game of big business competition
Scholastic Search, March 14, 1974

35. Electronic Games
Minnesota Technical Research
7541 Freemont Avenue South
Richfield, MN 55423

36. Contract Negotiations
MacMillan Publishing Co. Inc.
866 Third Avenue
New York, NY 10022

37. Executive Decision
The Business Management Game
A book shelf game available at many department stores
Minnesota Mining and Manufacturing
St. Paul, MN 55101

38. Stock Market
A book shelf game
Minnesota Mining and Manufacturing
St. Paul, MN 55101

39. Import
Students operate firms that import and export products 10.00
Simile II

PROJECT SELECTION IDEAS

One of most difficult tasks of the enterprise can be the selection of the products. The following suggestions are cited as general comments that may be of help.

1. Keep the product SIMPLE. You will be amazed how complex a simple object can be when it is put into a mass production situation.
2. It is often best if the students come up with the product ideas. Each class member should suggest possible ideas. From this list, narrow it down to the best five.
3. Catalogs, variety stores, etc. are good places to get ideas. Don't forget TV and old toys.
4. If time permits, have the students build a prototype of the 5 best ideas.
5. A market survey is often helpful in determining if a product is salable and for what price.
6. The following product feasability list may be helpful in selecting the best idea.
   A. Are the needed machines available?
   B. Do we have the technology (knowledge), tooling, jigs and fixtures necessary?
   C. Are the raw materials available?
   D. Do we have the available/enough money?
   E. How many can we make and sell?
   F. Do we have enough time?

Many of the following project ideas are from the Production Systems class and American Industry Project at University of Wisconsin - Stout and are proven mass production ideas that have been successful and may work for junior/senior high school enterprises. It is our belief, however, that the students should select the products - possibly one of these.

LINE PRODUCTION ACTIVITY #14

PEN SET

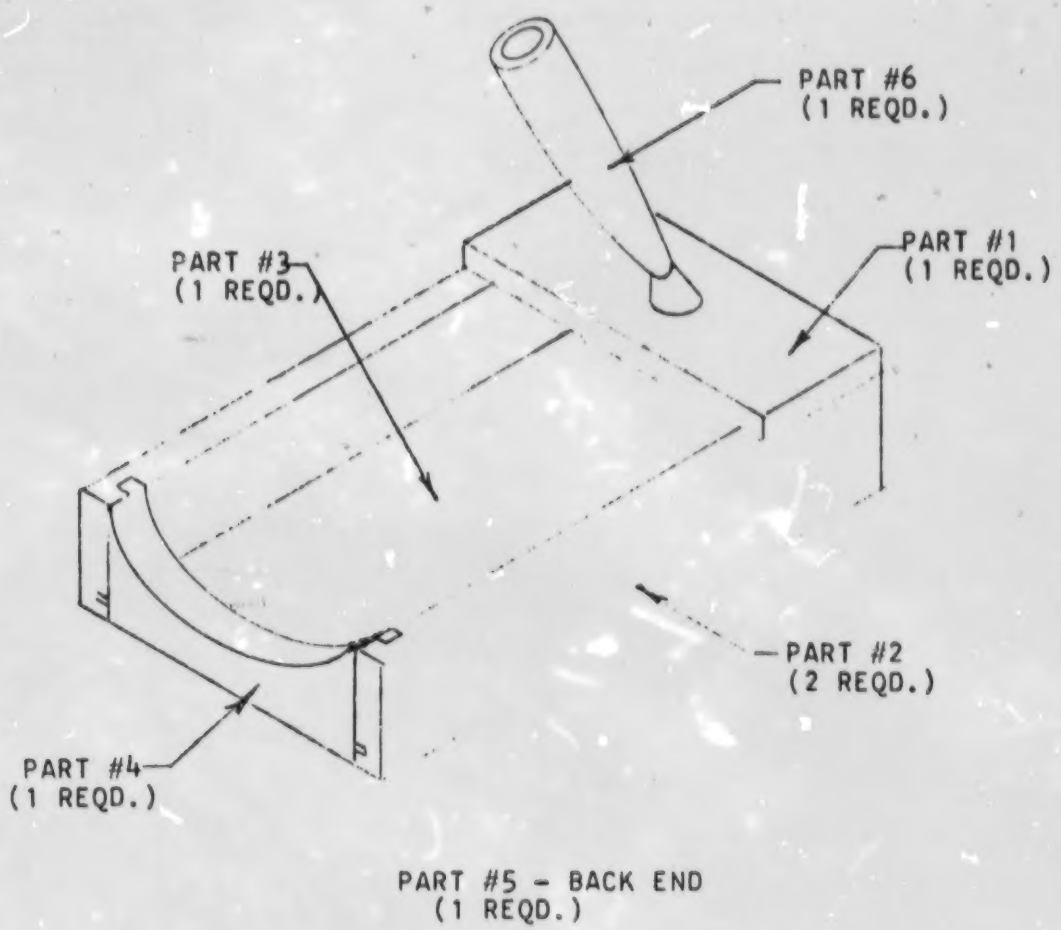

Title: Pen Set	Serial No.	Sheet 1 of 11
Company:	Model No.	
Date:	Part No.	

PEN SET

PRODUCTION ORDER

	Operation	Machine	Worker	#Fin.	#Rej.	#Com.
1	Surface to 1/8"	Surfacer				
2	Joint better edge	Jointer				
3	Rip to 1-1/16"	Var. Saw				
4	Joint to 1"	Jointer				
5	Crosscut to 3-7/8"	Var. Saw				
6	Assemble	Hand				

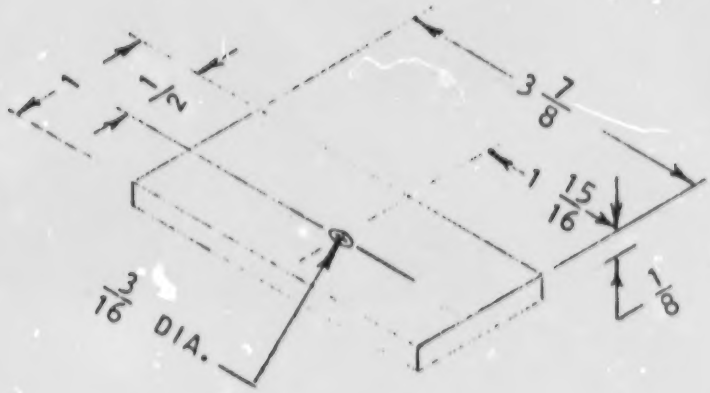

Serial No.	Sheet 2 of 11
Model No.	Part: #1
Model Name: Pen Set	Part Name: Top
No. Needed:	No. Started: No. Rejects:

PEN SET

PRODUCTION ORDER

	Operation	Machine	Worker	#Fin.	#Rej.	#Com.
1	Surface to 3/8"	Surfacer				
2	Joint better edge	Jointer				
3	Rip to 1"	Var. Saw				
4	Crosscut to 5-7/8"	Var. Saw				
5	Smooth inside	Belt sander				
6	Assemble	Hand				

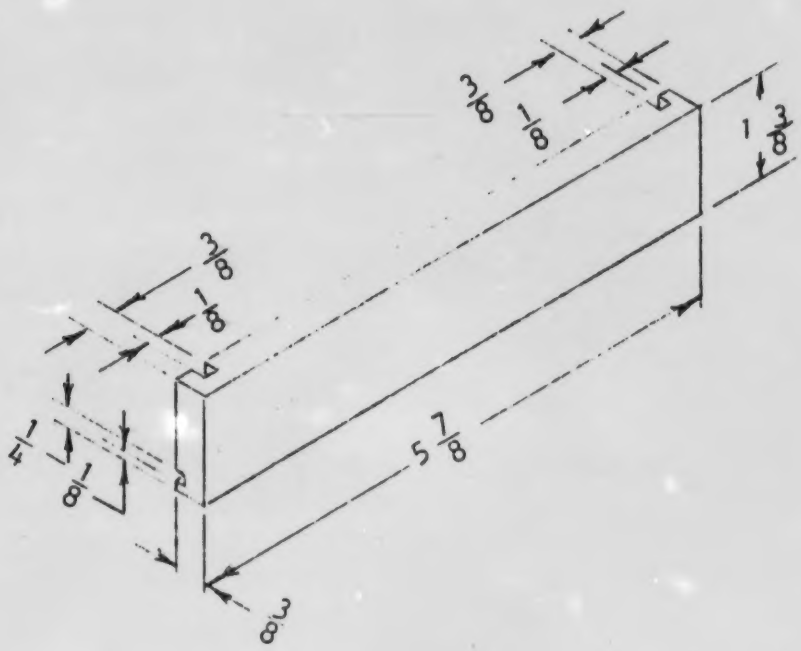

Serial No.	Sheet 3 of 11
Model No.	Part: #2
Model Name: Pen Set	Part Name: Side

No. Needed: No. Started: No. Rejects:

PEN SET

PRODUCTION ORDER

	Operation	Machine	Worker	#Fin.	#Rej.	#Com.
1	Surface to 3/8"	Surfacer				
2	Rip to 1"	Var. Saw				
3	Crosscut to 3-3/8"	Var. Saw				
4	Sand contour	Belt sander				
5	Sand inside	Belt sander				
6	Assemble	Hand				

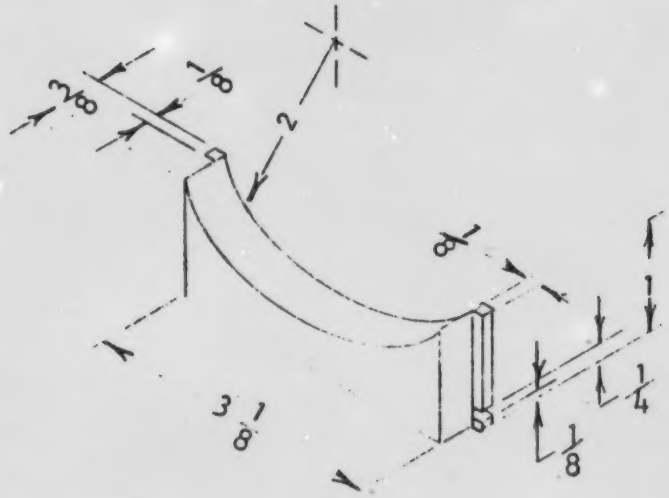

Serial No.	Sheet 4 of 11
Model No.	Part: #4
Model Name: Pen Set	Part Name: Front End

No. Needed: No. Started: No. Rejects:

PEN SET

PRODUCTION ORDER						
	Operation	Machine	Worker	#Fin.	#Rej.	#Com.
1	Surface to 3/8"	Surfacer				
2	Joint better edge	Jointer				
3	Rip to 1"	Var. Saw				
4	Crosscut to 3-3/8"	Var. Saw				
5	Sand inside	Belt sander				
6	Assemble	Hand				

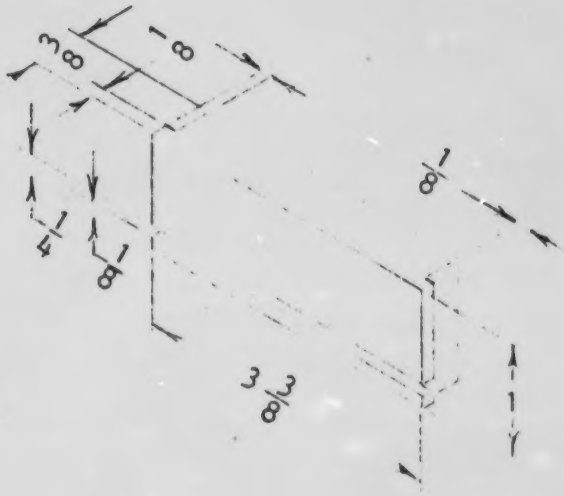

Serial No.	Sheet 5 of 11
Model No.	Part: #5
Model Name: Pen Set	Part Name: Back

No. Needed: No. Started: No. Rejects:

PEN SET

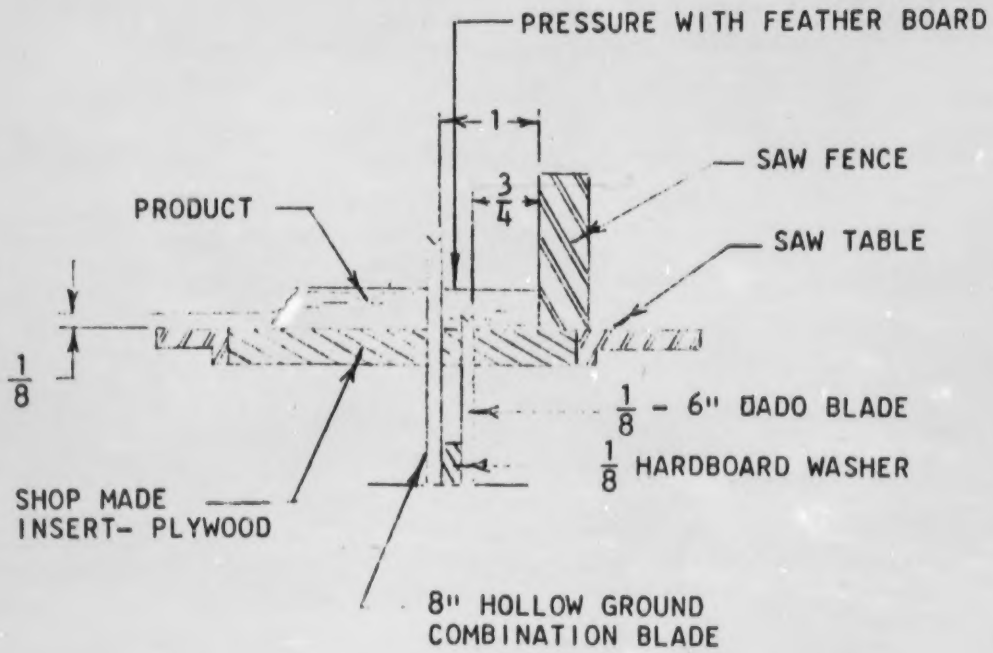

Title: Pen Set Tooling for ripping sides and ends	Serial No.	Sheet 6 of 11
Company:	Model No.	
Date:	PartNo.	

PEN SET

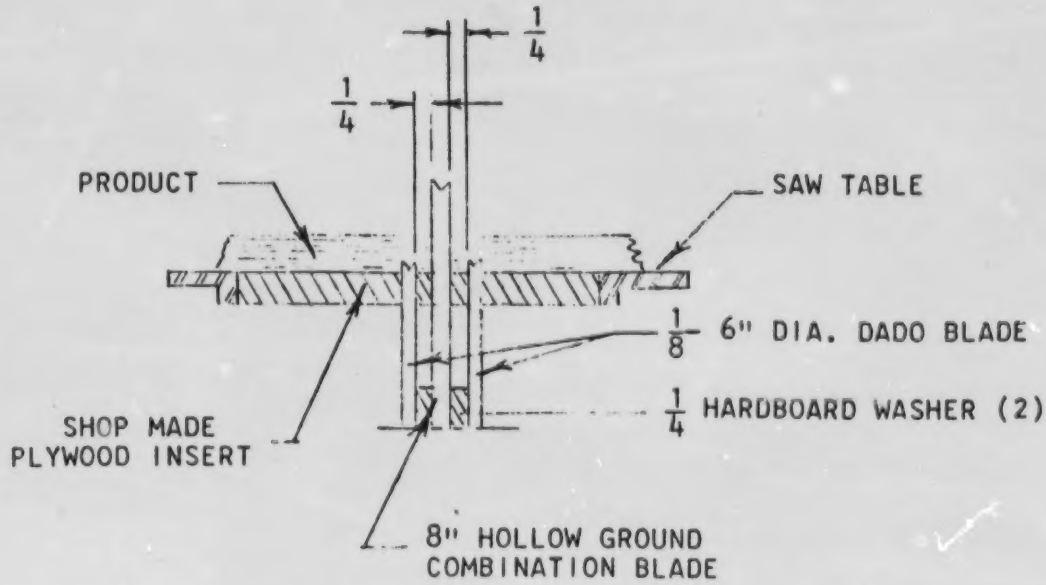

Title: Pen Set. Tooling for crosscutting sides to length.	Serial No.	Sheet 7 of 11
Company:	Model No.	
Date:	Part No.	

PEN SET

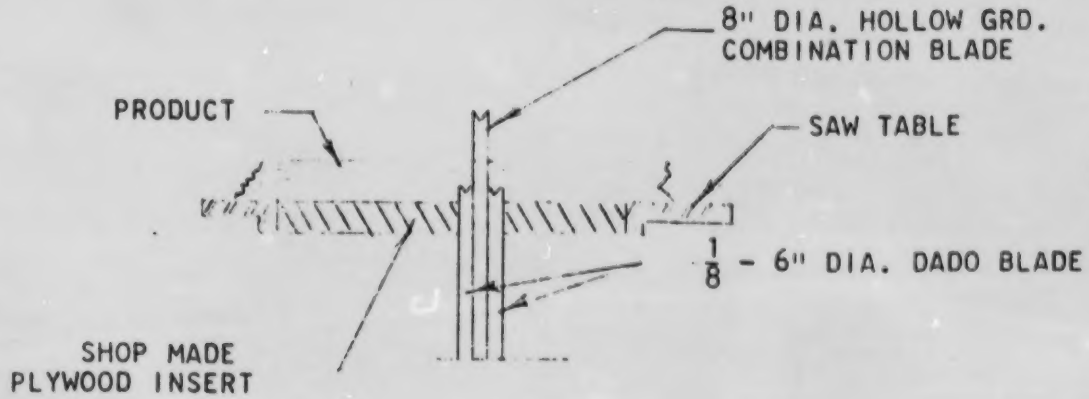

Title: Pen Set. Tooling for crosscutting ends to length.	Serial No.	Sheet 8 of 11
Company:	Model No.	
Date:	Part No.	

PEN SET

PRODUCTION ORDER

	Operation	Machine	Worker	#Fin.	#Rej.	#Com.
1	Crosscut to 12" Face	P. Cutter				
2	Rip to 4" Face	P. Cutter				
3	Rip to 12" core	P. Cutter				
4	Crosscut to 4" core	P. Cutter				
5	Press	Press				
6	Sand both sides	Belt sander				
7	Joint better edge	Jointer				
8	Rip to 3-3/8"	Var. Saw				
9	Crosscut to 5-3/8"	Var. Saw				
10	Assemble	Hand				

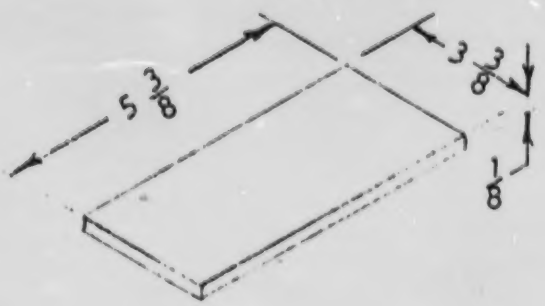

CUTTING SEQUENCE

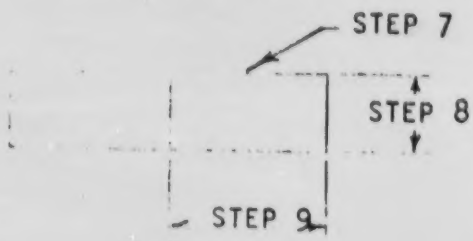

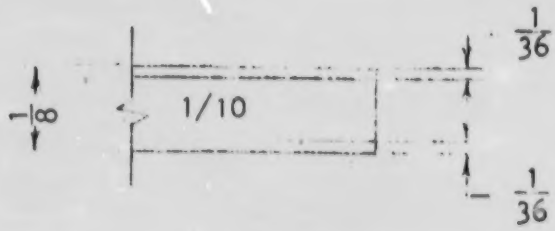

Serial No.	Sheet 9 of 11
Model No.	Part: #3
Model Name: Pen Set	Part Name: Bottom

PEN SET

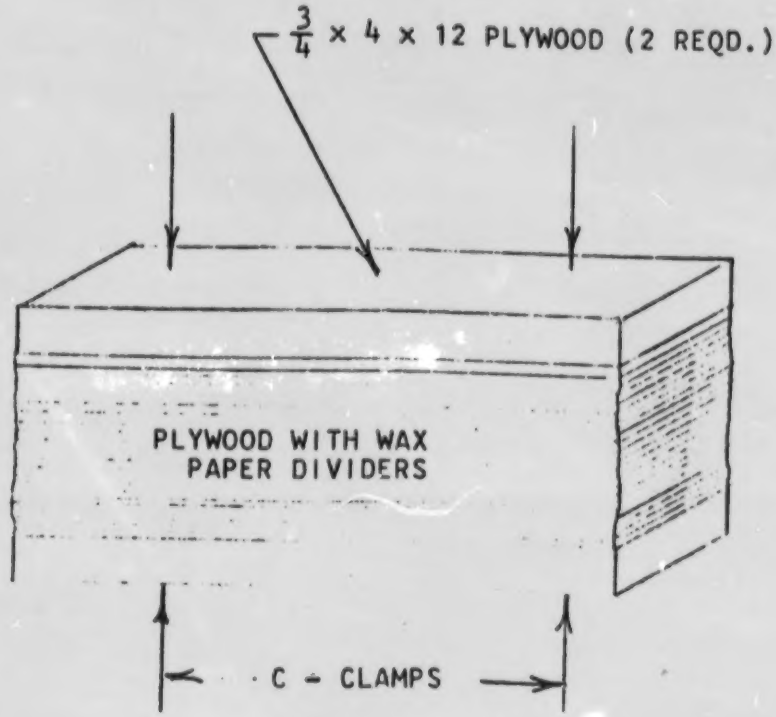

Title: Pen Set Plywood Press	Serial No.	Sheet 10 Of 11
Company:	Model No.	
Date:	Part No.	

PEN SET

PRODUCTION ORDER

	Operation	Machine	Worker	#Fin.	#Rej.	#Com.
1	Sand top & bottom	Belt sander				
2	Assemble top	Hand				
3	Plug holes	Hand				
4	Sand sides & ends	Belt sander				
5	Finish sand	Hand				
6	Finish	Hand				
7	Assemble pen	Hand				
8	Put on felt tabs	Hand				
9	Package	Hand				

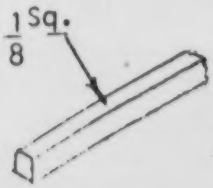

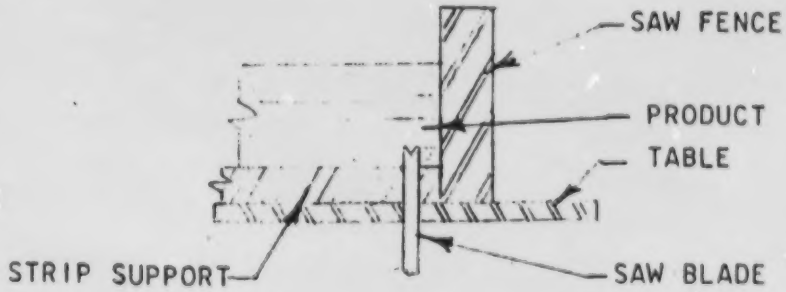

Serial No.	Sheet 11 of 11
Model No.	Part:
Model Name: Pen Set	Part Name: Processes after asby.

No. Needed: No. Started: No. Rejects:

CORN SKEWER HOLDER

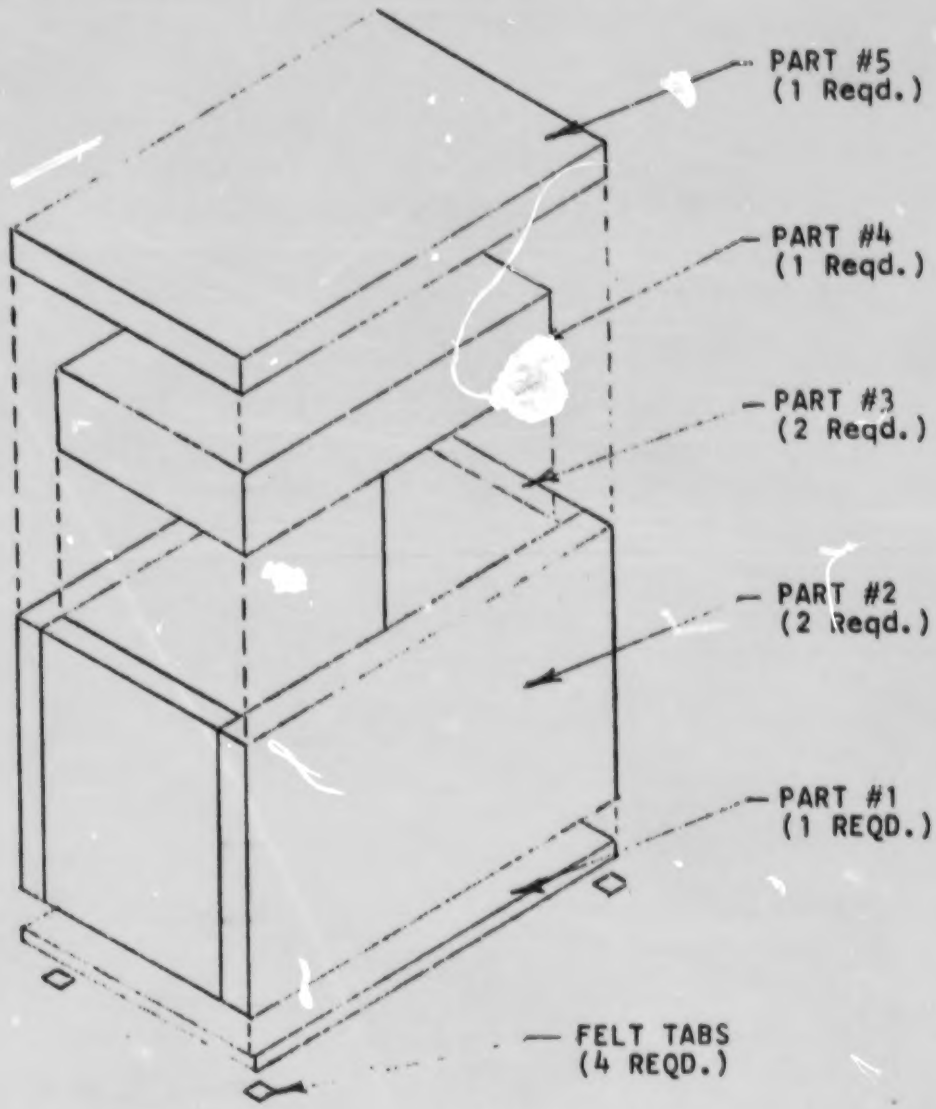

Title: Corn Skewer Holder	Serial No.	Sheet 1 of 10
Company:	Model No.	
Date:	Part No.	

CORN SKEWER HOLDER

PRODUCTION ORDER

	Operation	Machine	Worker	#Fin.	#Rej.	#Com.
1	Cut veneer	Sq. Shears or Paper cutter				
2	Apply adhesive	Paint roller				
3	Press	Vise or clamp				
4	Trim first edge	Bandsaw				
5	Cut to width 3-3/4"	Bandsaw				
6	Cut first end	Bandsaw				
7	Cut to length 5"	Bandsaw				
8	Sand good side	P. Belt sand.				
9	Assemble	Hand				

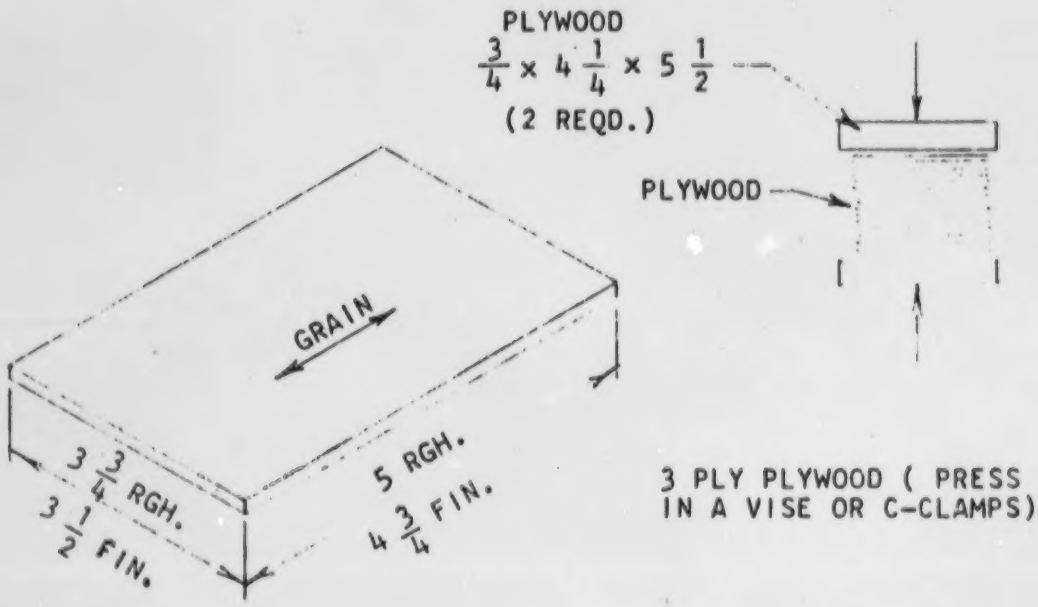

Serial No.	Sheet 2 of 10
Model No.	Part: #1
Model Name: Corn Skewer Holder	Part Name: Bottom
No. Needed: No. Started:	No. Rejects:

CORN SKEWER HOLDER

PRODUCTION ORDER

	Operation	Machine	Worker	#Fin.	#Rej.	#Com.
1	Rip to 2-5/8"	Bandsaw				
2	Crosscut to 4-7/8"	Bandsaw				
3	Sand poor side	Belt sander				

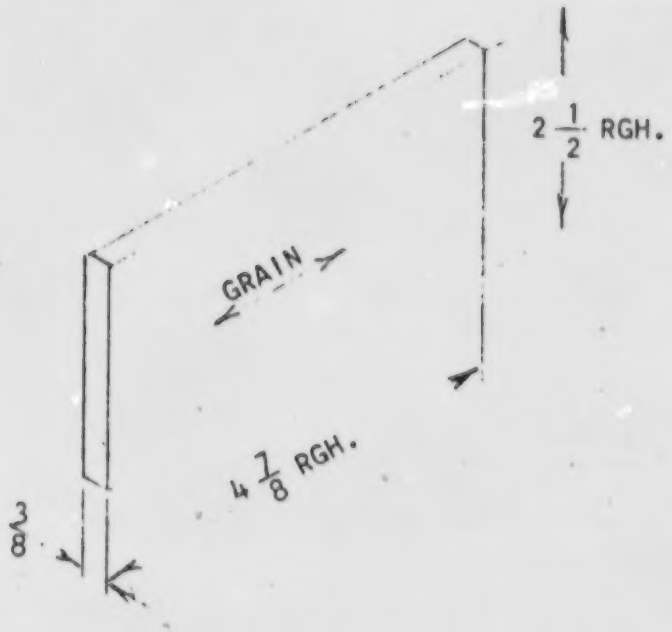

Serial No.

Model No.

Model Name: Corn Skewer Holder

Sheet 3 of 10

Part: #2

Part Name: Side

No. Needed: No. Started: No. Rejects:

CORN SKEWER HOLDER

PRODUCTION ORDER

	Operation	Machine	Worker	#Fin.	#Rej.	#Com.
1	Rip to 2-1/2" Rgh.	Bandsaw				
2	Crosscut to 2-7/8 Rgh.	Bandsaw				
3	Sand 1st edge square	Disc sander				
4	Sand to length 2-3/4"	Disc sander				
5	Sand poor side	Belt sander				
6	Assemble	Hand				

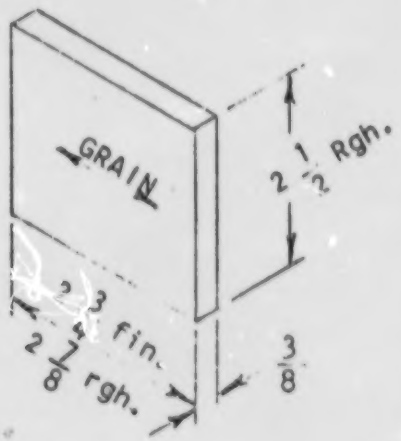

Serial No.

Model No.

Model Name: Corn Skewer Holder

Sheet 4 of 10

Part: #3

Part Name: End

No. Needed: No. Started: No. Rejects:

339

CORN SKEWER HOLDER

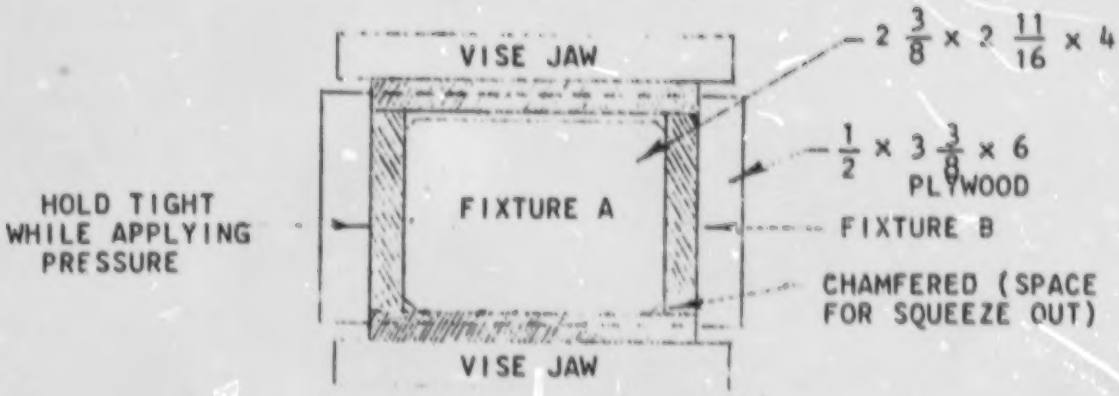

NOTE: AFTER ASSEMBLY, SAND TOP AND BOTTOM FLAT

Title: Corn Skewer Holder - Assembly	Serial No.	Sheet 5 of 10
Company:	Model No.	
Date:	Part No. Fixtures A & B	

CORN SKEWER HOLDER

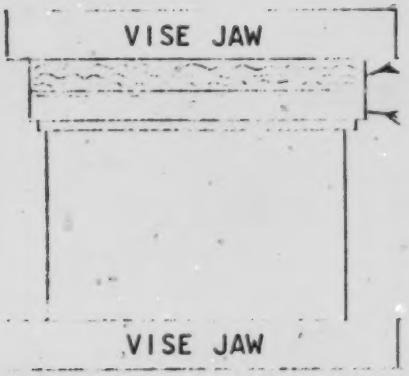

— $\frac{1}{2}$ x 4 x 5 FIRM FOAM RUBBER

— $\frac{1}{2}$ x 4 x 5 PLYWOOD

Title: Corn Skewer Holder	Serial No.	Sheet 6 of 10
Company:	Model No.	
Date:	Part No. Fixture C	

CORN SKEWER HOLDER

PRODUCTION ORDER

	Operation	Machine	Worker	#Fin.	#Rej.	#Com.
1	Sand ends	Belt sander				
2	Sand sides	Belt sander				
3	Finish sand	Hand				
4	Finish	Hand				
5	Put on felt tabs	Hand				
6	Assemble with top	Hand				
7	Package	Hand				

Serial No.

Model No.

Model Name: Corn Skewer Holder

Sheet 7 of 10

Part: Processes after asby.(box)

Part Name:

No. Needed: No. Started: No. Rejects:

CORN SKEWER HOLDER

PRODUCTION ORDER

	Operation	Machine	Worker	#Fin.	#Rej.	#Com.
1	Rip to 2-3/4"	Bandsaw				
2	Crosscut to 4"	Bandsaw				
3	Assemble	Hand				

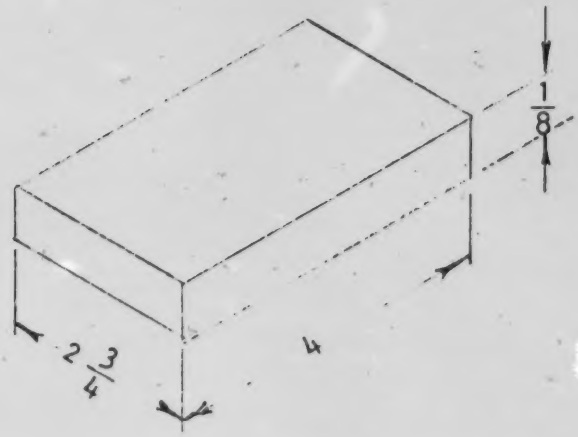

Serial No.

Sheet 8 of 10

Model No.

Part: #4

Model Name: Corn Skewer Holder

Part Name: Friction Pad

No. Needed: No. Started: No. Rejects:

CORN SKEWER HOLDER

PRODUCTION ORDER

	Operation	Machine	Worker	#Fin.	#Rej.	#Com.
1	Rip to 3-5/8"	Bandsaw				
2	Crosscut to 4-7/8"	Bandsaw				
3	Sand first edge	Belt sander				
4	Sand width 3-1/2"	Belt sander				
5	Sand 1st end square	Belt sander				
6	Sand to length 4-3/4"	Belt sand.				
7	Sand both sides	Belt sander				
8	Finish sand	Hand				
9	Finish	Hand				
10	Assemble	Hand				

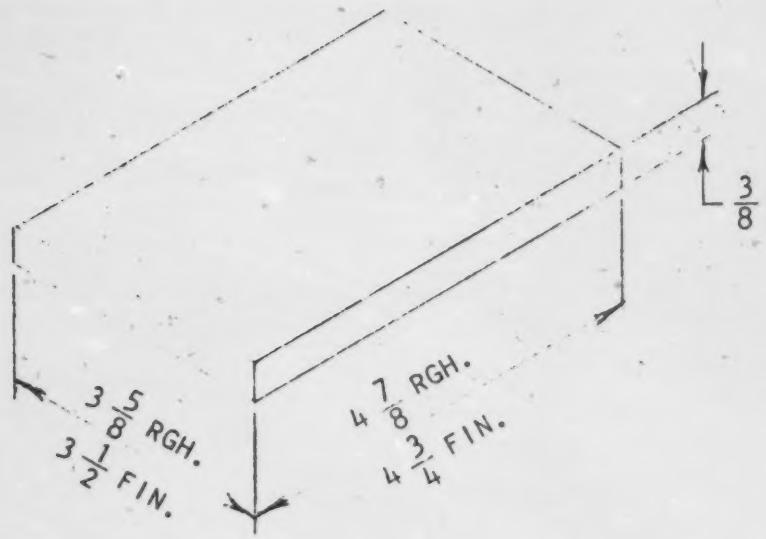

Serial No.
Model No.
Model Name: Corn Skewer Holder

Sheet 9 of 10
Part: #5
Part Name: Top

No. Needed: No. Started: No. Rejects:

CORN SKEWER HOLDER

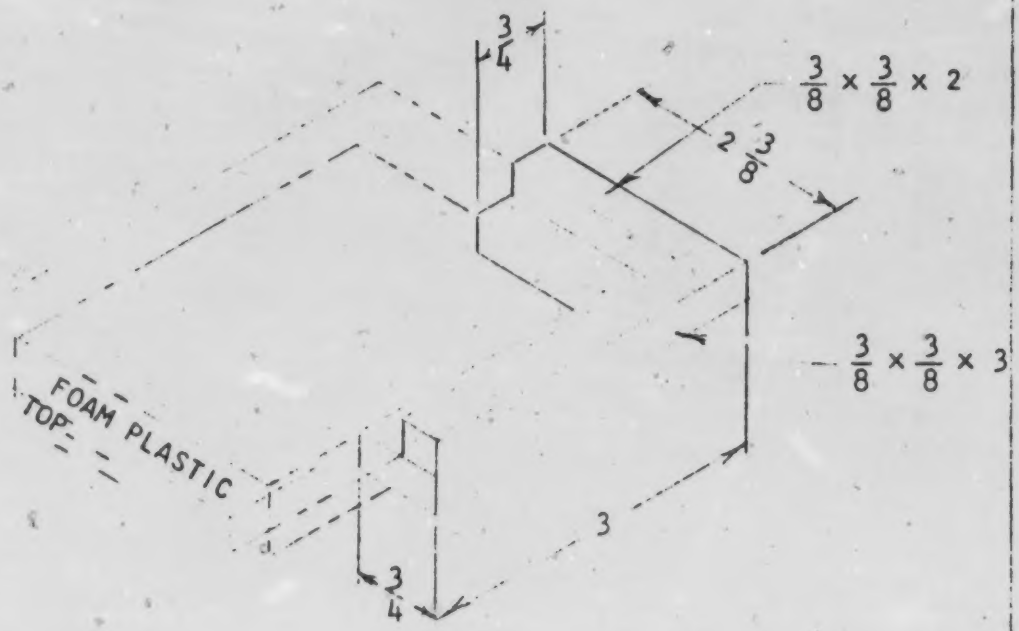

Title: Corn Skewer Holder	Serial No.	Sheet 10 of 10
Company:	Model No.	
Date:	Part No. Fixture D	

345

LINE PRODUCTION ACTIVITY #13

CORN SKEWER

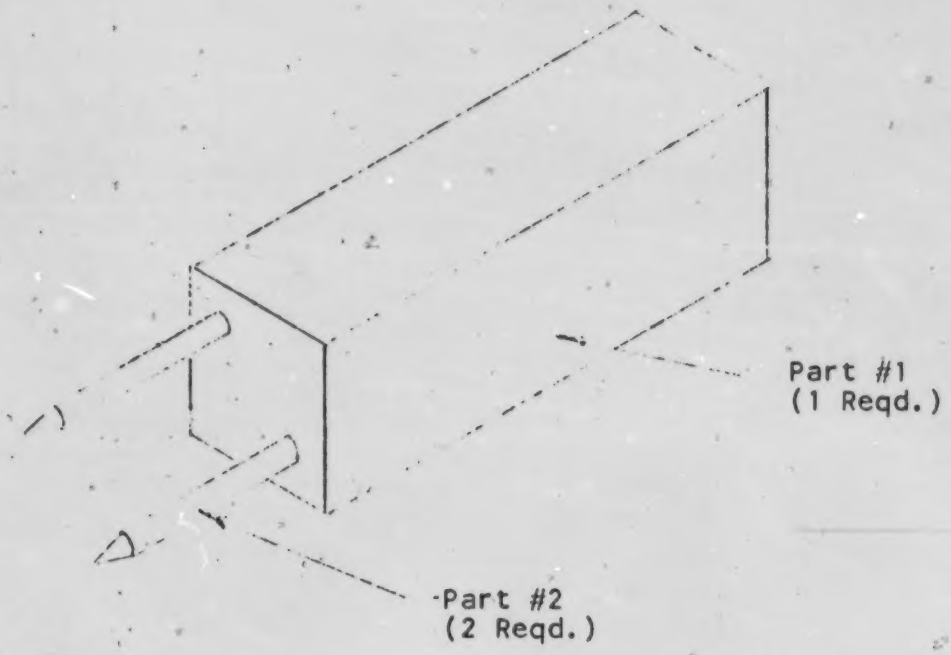

Title: Corn Skewer	Serial No.	Sheet 1 of 8
Company:	Model No.	
Date:	Part No.	

CORN SKEWER

PRODUCTION ORDER

	Operation	Machine	Worker	#Fin.	#Rej.	#Com.
1	Rip width 11/16"	Bandsaw				
2	Rip thickness 11/16"	Bandsaw				
3	Crosscut 1-9/16"	Bandsaw				
4	Sand ends	Disc sander				
5	Sand sides	Belt sander				
6	Hand sand	Hand				
7	Drill holes	Drill Press				
8	Assemble	Hand				

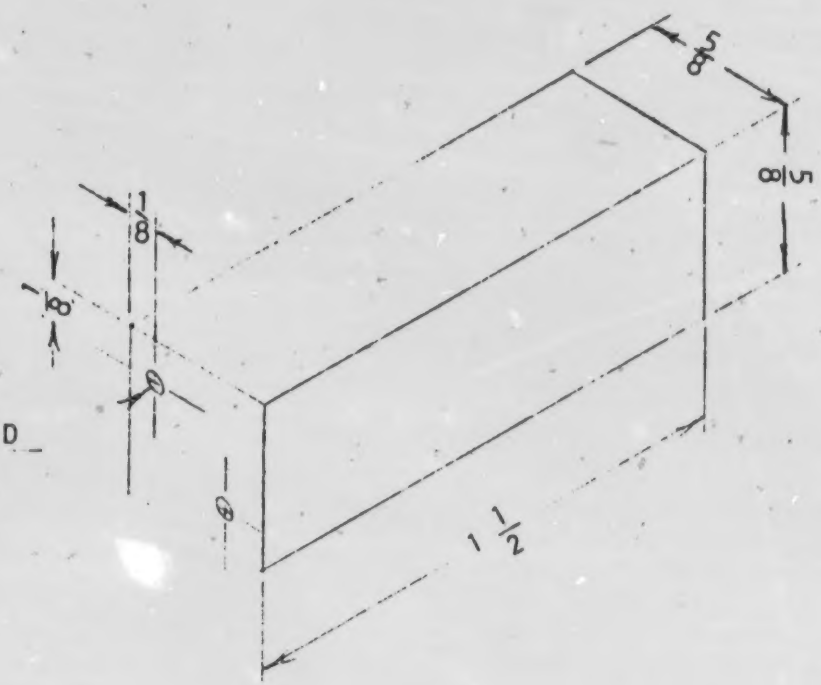

HOLES DRILLED
WITH NAIL
USED AS BIT
$\frac{1}{2}$ Depth

Serial No.

Model No.

Model Name: Corn Skewer

Sheet 2 of 8

Part: #1

Part Name: Body

No. Needed: No. Started: No. Rejects:

CORN SKEWER

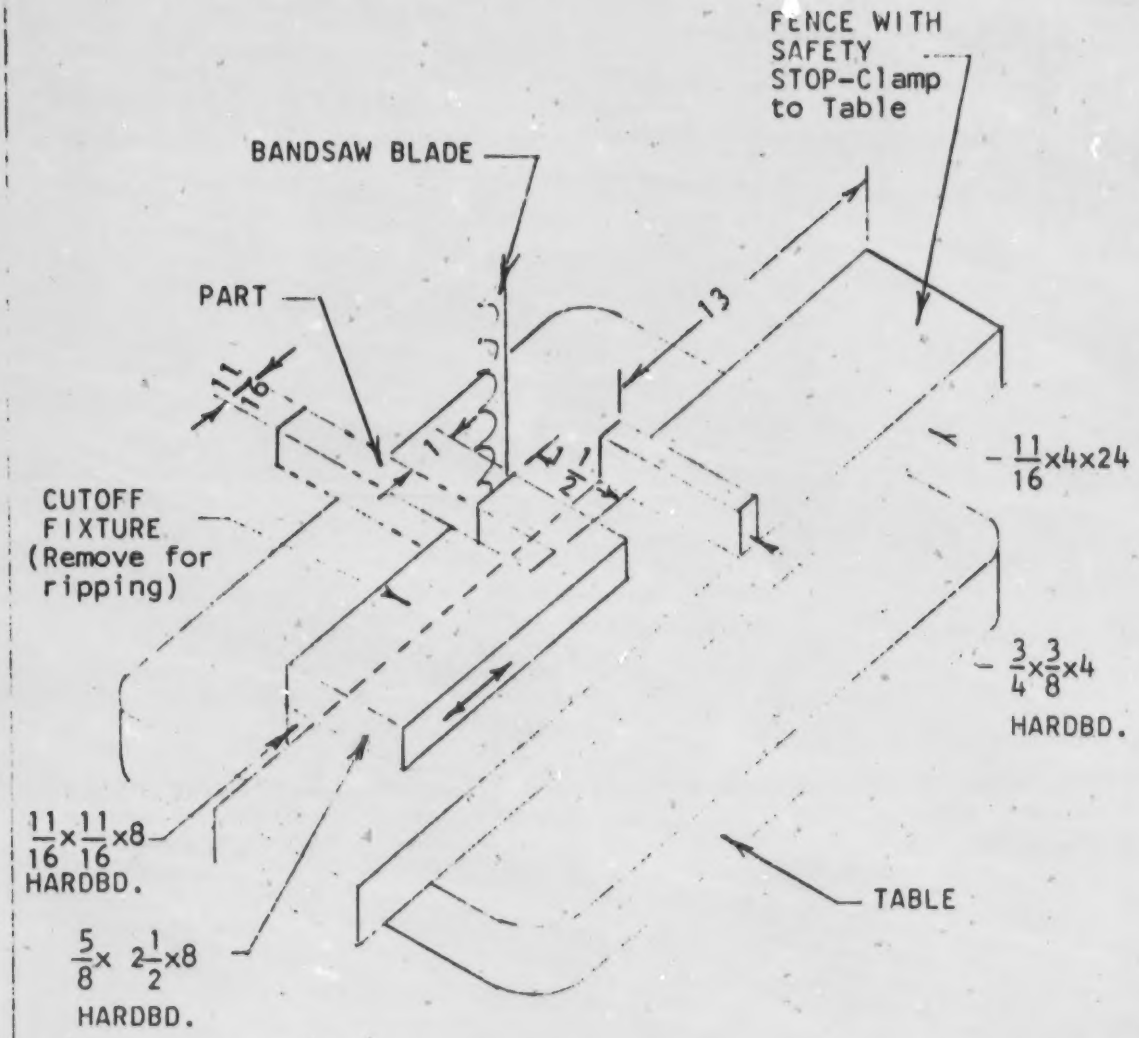

Title: Corn Skewer Ripping & Cutoff Fixture	Serial No.	Sheet 3 of 8
Company:	Model No.	
Date:	Part No.	

CORN SKEWER

PRODUCTION ORDER

	Operation	Machine	Worker	#Fin.	#Rej.	#Com.
1	Cut to length	Wire Cutter				
2	Assemble	Hand				

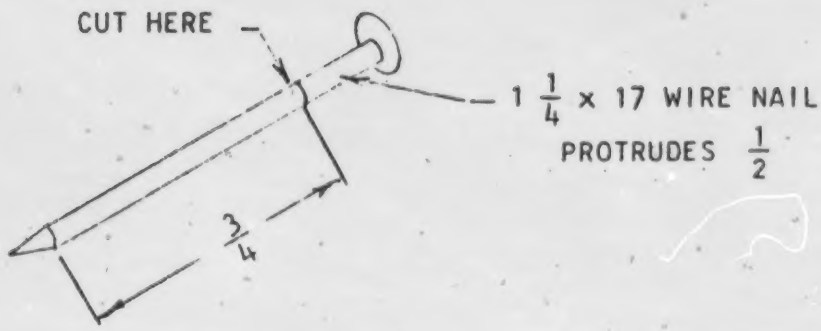

Serial No.	Sheet 4 of 8
Model No.	Part: #2
Model Name: Corn Skewer	Part Name: Nail
No. Needed: No. Started:	No. Rejects:

CORN SKEWER

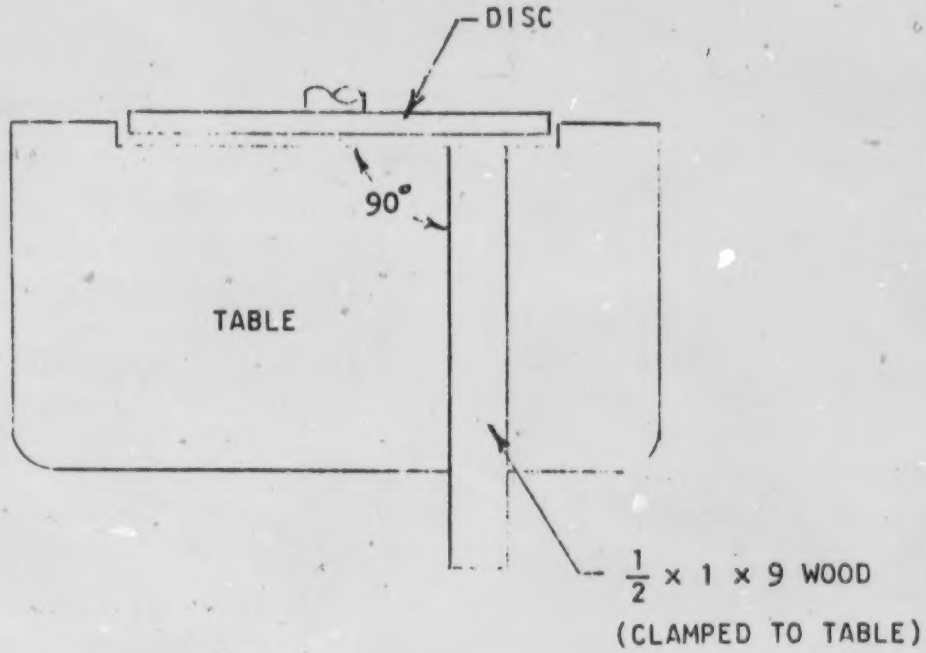

Title: Corn Skewer Disc Sander Fixture	Serial No.	Sheet 5 of 8
Company:	Model No.	
Date:	Part No.	

CORN SKEWER

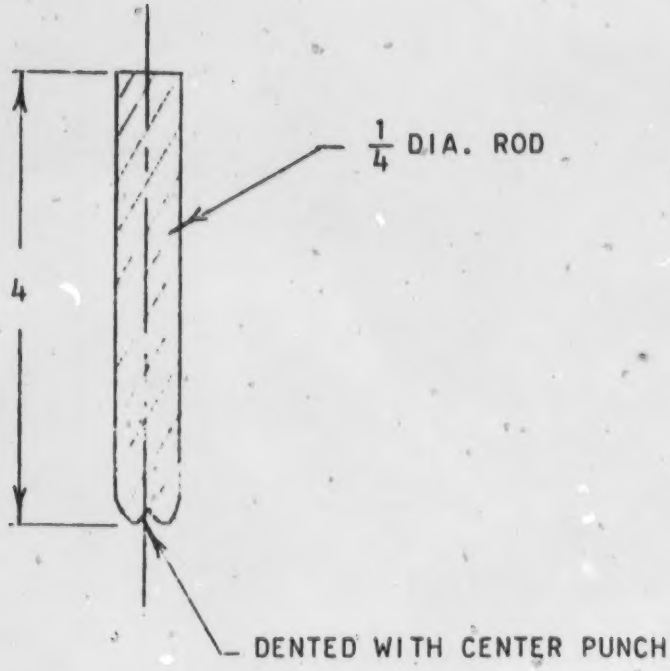

Title: Corn Skewer Nail Pressing Fixture	Serial No.	Sheet 6 of 8
Company:	Model No.	
Date:	Part No.	

CORN SKEWER

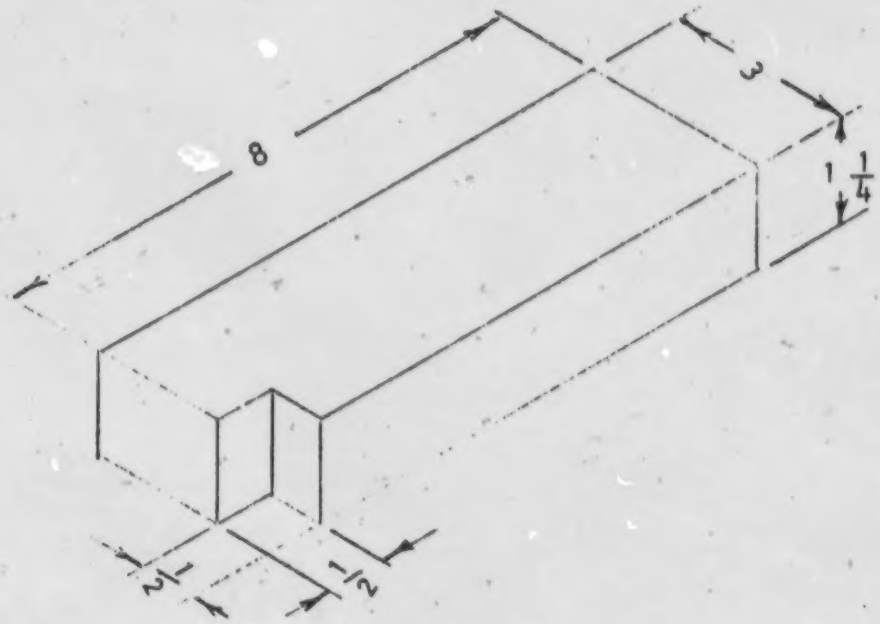

Title: Corn Skewer Drilling & Nail Pressing Fixture	Serial No.	Sheet 7 of 8
Company:	Model No.	
Date:	Part No.	

CORN SKEWER

PRODUCTION ORDER

	Operation	Machine	Worker	#Fin.	#Rej.	#Com.
1	Final inspection	Hand				
2	Einish application	Hand				
3	Soak overnight					
4	Package	Hand				

Serial No.

Model No.

Model Name: Corn Skewer

Sheet 8 of 8

Part:

Part Name: Processes after asby

No. Needed: No. Started : No. Rejects:

LINE PRODUCTION ACTIVITY #12

CANDY BOX

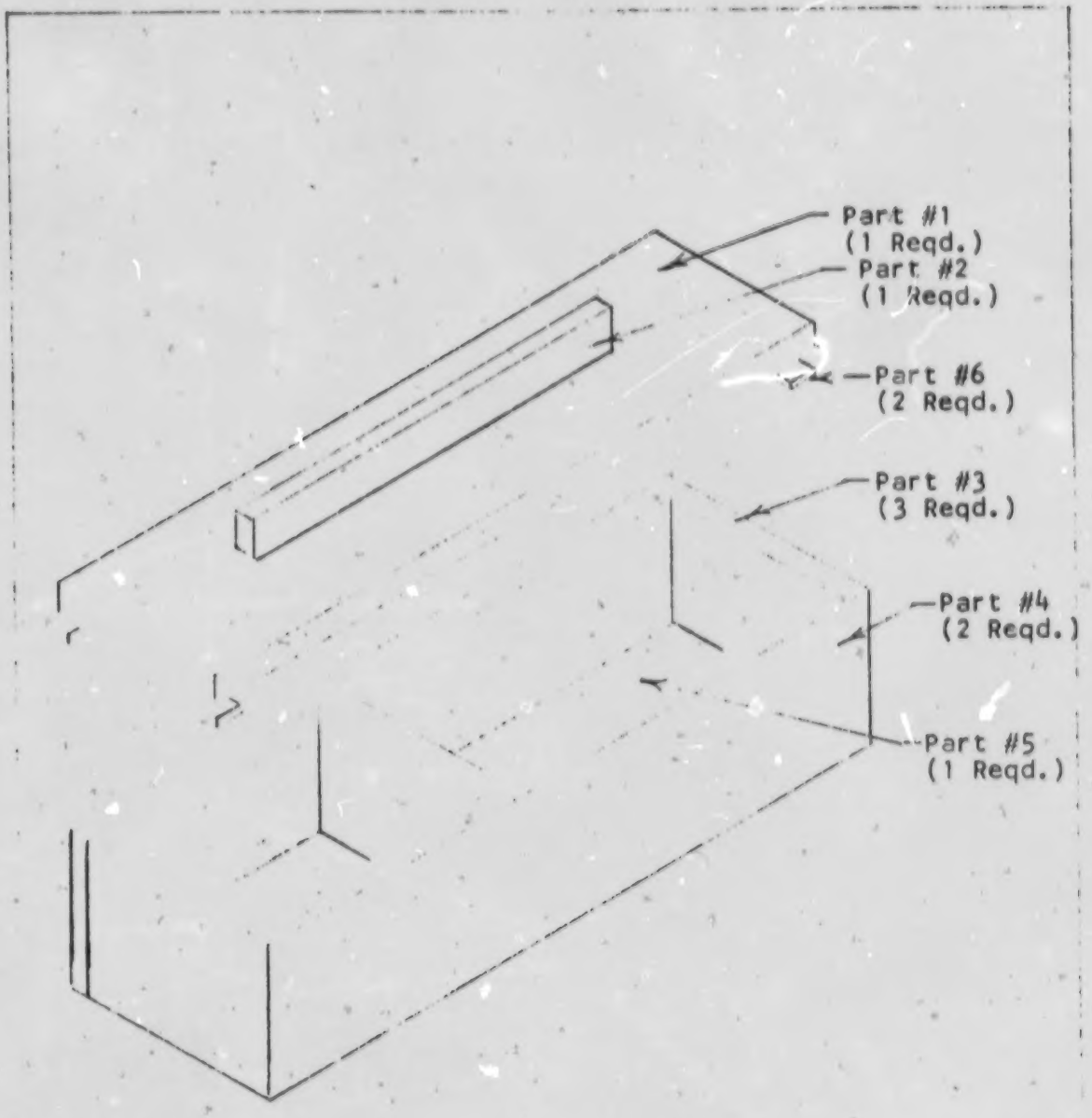

Title: Candy Box	Serial No.	Sheet 1 of 15
Company:	Model No.	
Date:	Part No.	

CANDY BOX

PRODUCTION ORDER

	Operation	Machine	Worker	#Fin.	#Rej.	#Com.
1	Rip to 3/4"	Bandsaw				
2	Crosscut to 8-1/8"	Bandsaw				
3	Sand edges	B. Sander				
4	Sand better end	Disc Sander				
5	Sand to 8"	Disc Sander				
6	Sand sides	B. Sander				
7	Assemble	Hand				

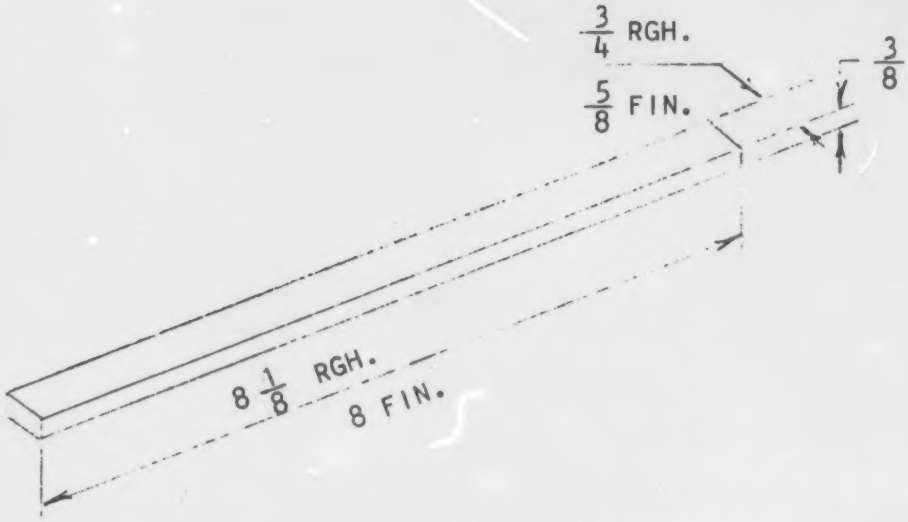

Serial No.

Model No.

Model Name: Candy Box

Sheet 2 of 15

Part: #2

Part Name: Handle

No. Needed: No. Started: No. Rejects:

CANDY BOX

PRODUCTION ORDER

	Operation	Machine	Worker	#Fin.	#Rej.	#Com.
1	Rip to 4-1/8"	Bandsaw				
2	Crosscut to 12-1/8"	Bandsaw				
3	Sand edge	Belt sander				
4	Sand to width	Belt sander				
5	Sand better end	Disc sander				
6	Sand to 12"	Disc snader				
7	Sand sides	Belt sander				
8	Assemble	Hand				

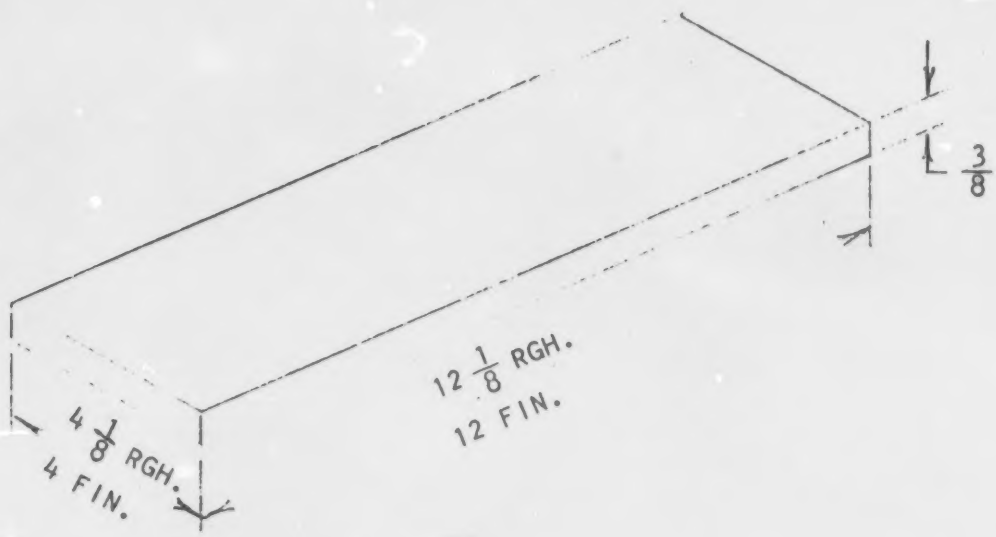

Serial No. Sheet 3 of 15

Model No. Part: #1

Model Name: Candy Box Part Name: Top

No. Needed: No. Started: No. Rejects:

CANDY BOX

PRODUCTION ORDER

	Operation	Machine	Worker	#Fin.	#Rej.	#Com.
1	Rip to 3/8"	Bandsaw				
2	Crosscut to 3"	Bandsaw				
3	Sand sides	Belt sander				
4	Sand edges	Belt sander				
5	Sand first end	Disc sander				
6	Sand to 2-7/8"	Disc sander				
7	Assemble	Hand				

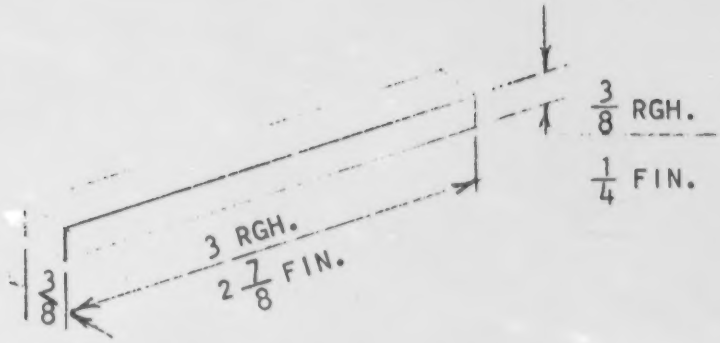

Serial No.

Sheet 4 of 15

Model No.

Part: #6

Model Name: Candy Box

Part Name: Cleat

No. Needed: No. Started: No. Rejects:

CANDY BOX

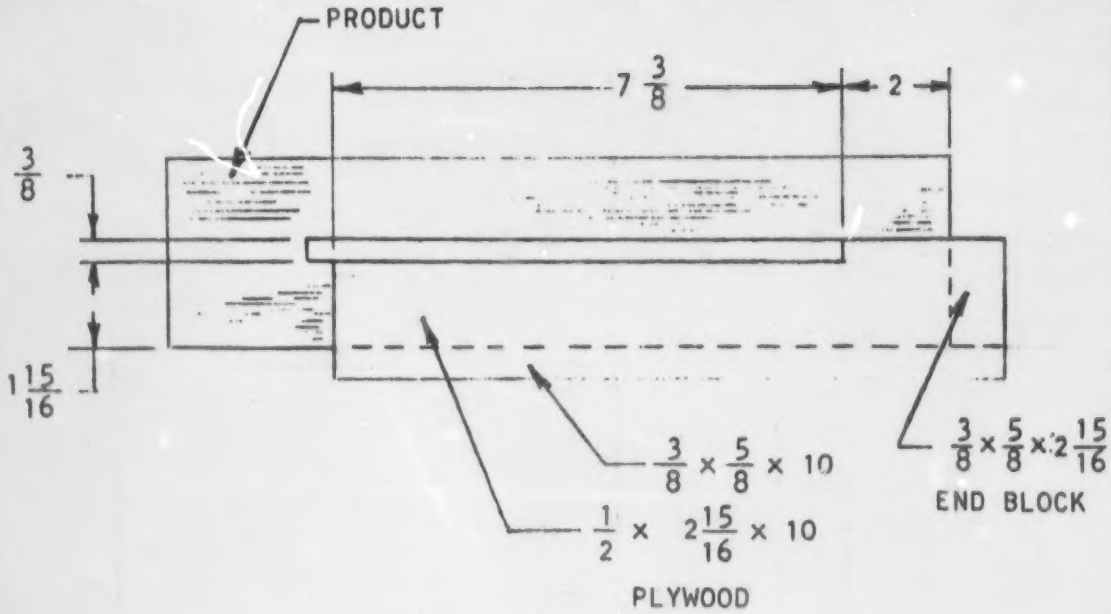

Title: Candy Box Assembly Fixture(Handle)	Serial No.	Sheet 5 of 15
Company:	Model No.	
Date:	Part No.	

CANDY BOX

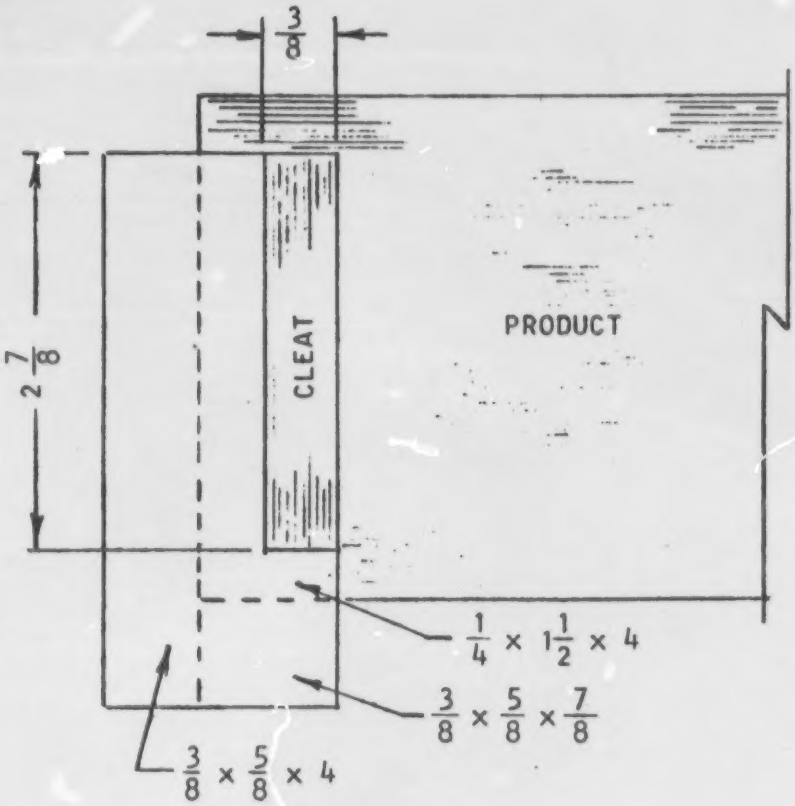

Title: Candy Box Assembly Fixture(Cleats	Serial No.	Sheet 6 of 15
Company:	Model No.	
Date:	Part No.	

CANDY BOX

PRODUCTION ORDER

	Operation	Machine	Worker	#Fin.	#Rej.	#Com.
1	Finish Sand	Hand				
2	Finish	Hand				
3	Assemble	Hand				
4	Package	Hand				

Serial No.

Model No.

Model Name: Candy Box

Sheet 7 of 15

Part: Top

Part Name: Processes after asby.

No. Needed: No. Started: No. Rejects:

CANDY BOX

PRODUCTION ORDER

	Operation	Machine	Worker	#Fin.	#Rej.	#Com.
1	Rip to 2"	Bandsaw				
2	Crosscut to 3-1/8"	Bandsaw				
3	Sand better end	Disc sander				
4	Sand to length	Disc sander				
5	Sand poor side	Belt sander				
6	Assemble	Hand				

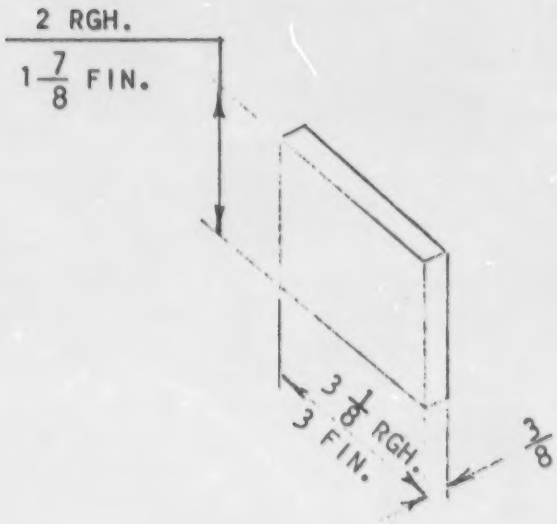

Serial No.

Model No.

Model Name: Candy Box

Sheet 8 of 15

Part: #3

Part Name: End and Partition

No. Needed: No. Started: No. Rejects:

CANDY BOX

PRODUCTION ORDER

	Operation	Machine	Worker	#Fin.	#Rej.	#Com.
1	Rip to 2"	Bandsaw				
2	Crosscut to 11-7/8"	Bandsaw				
3	Sand both sides	Belt sander				
4	Assemble	Hand				

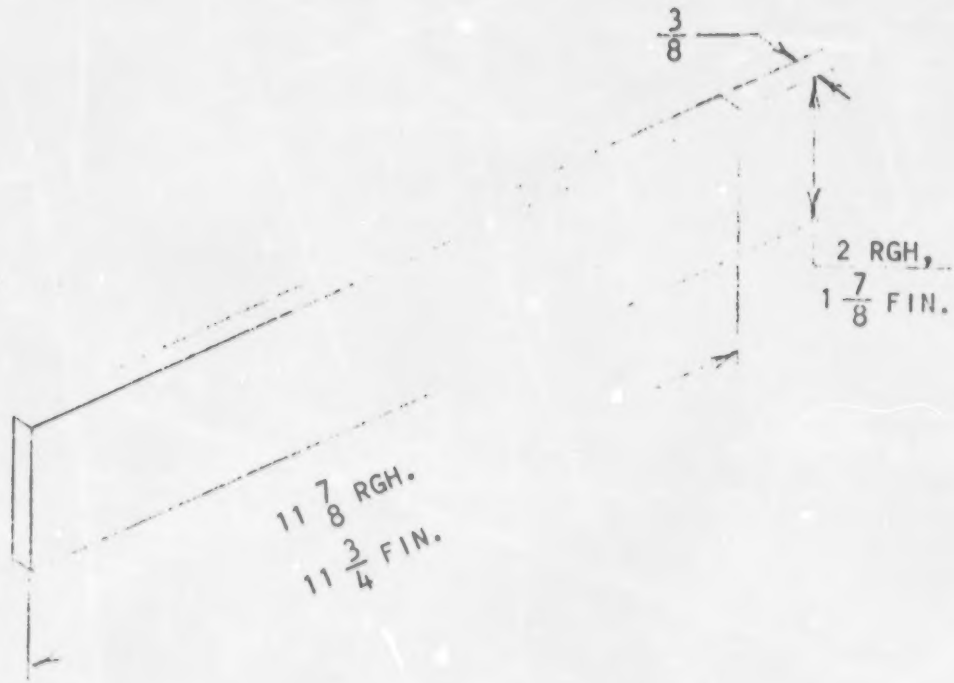

Serial No.

Model No.

Model Name: Candy Box

Sheet 9 of 15

Part: #4

Part Name: Side

No. Needed: No. Started: No. Rejects:

CANDY BOX

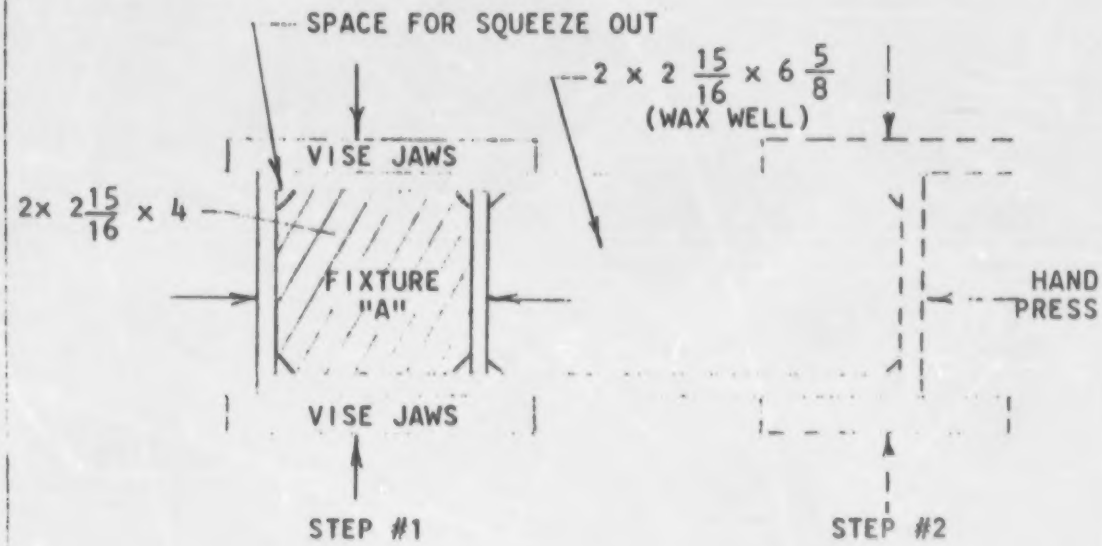

Title: Candy Box Assembly Fixt.(end & pt.	Serial No.	Sheet 10 of 15
Company:	Model No.	
Date:	Part No.	

CANDY BOX

PRODUCTION ORDER

	Operation	Machine	Worker	#Fin.	#Rej.	#Com.
1	Sand top flat	Belt sander				
2	Sand bottom flat	Belt sander				
3	Assemble (Bottom)	Hand				

Serial No.

Sheet 11 of 15

Model No.

Part:

Model Name: Candy Box

Part Name: Processes after ends, sides & partition asby.

No. Needed:

No. Started:

No. Rejects:

CANDY BOX

PRODUCTION ORDER

	Operation	Machine	Worker	#Fin.	#Rej.	#Com.
1	Crosscut face veneer to 12-1/2"	P. Cutter				
2	Rip face veneer 4-1/4"	P. Cutter				
3	Crosscut core 4-1/4"	P. Cutter				
4	Rip core 12-1/2"	P. Cutter				
5	Press	Press or C-Clamps				
6	Cut to Rgh. size	Bandsaw				
7	Sand better side	P. Belt sand				
8	Assemble	Hand				

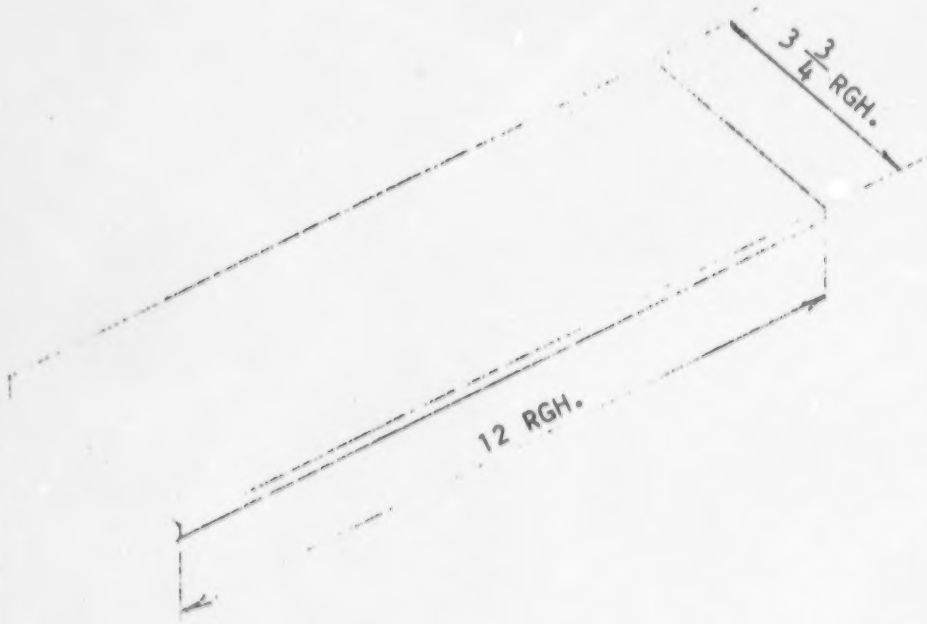

Serial No. | Sheet 12 of 1[illegible]

Model No. | Part: #5

Model Name: Candy Box | Part Name: Bottom

No. Needed: No. Started: No. Rejects:

CANDY BOX

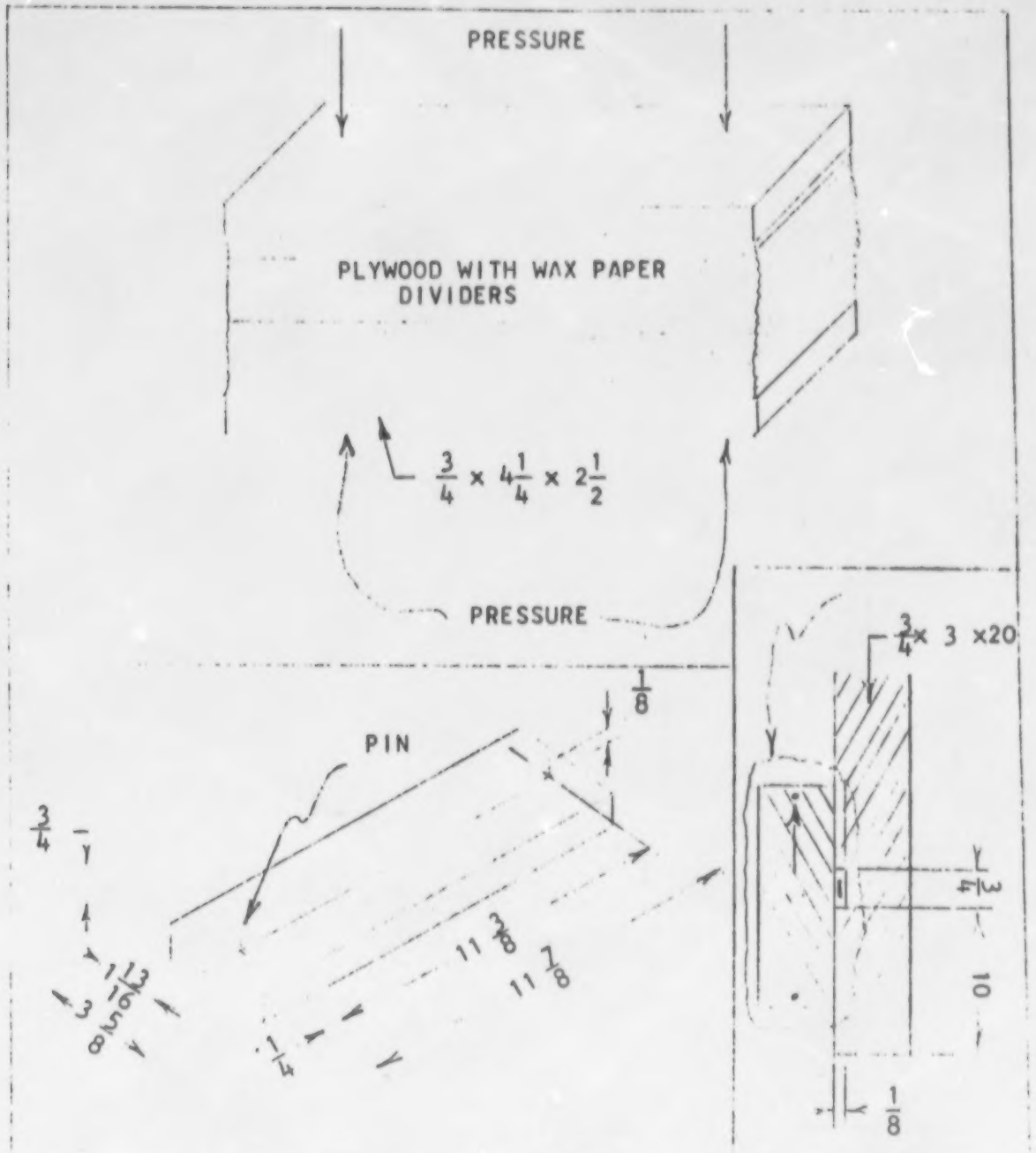

Title: Candy Box P.P. Cutting Fix. (Bot.)	Serial No.	Sheet 13 of 15
Company:	Model No.	
Date:	Part No.	

CANDY BOX

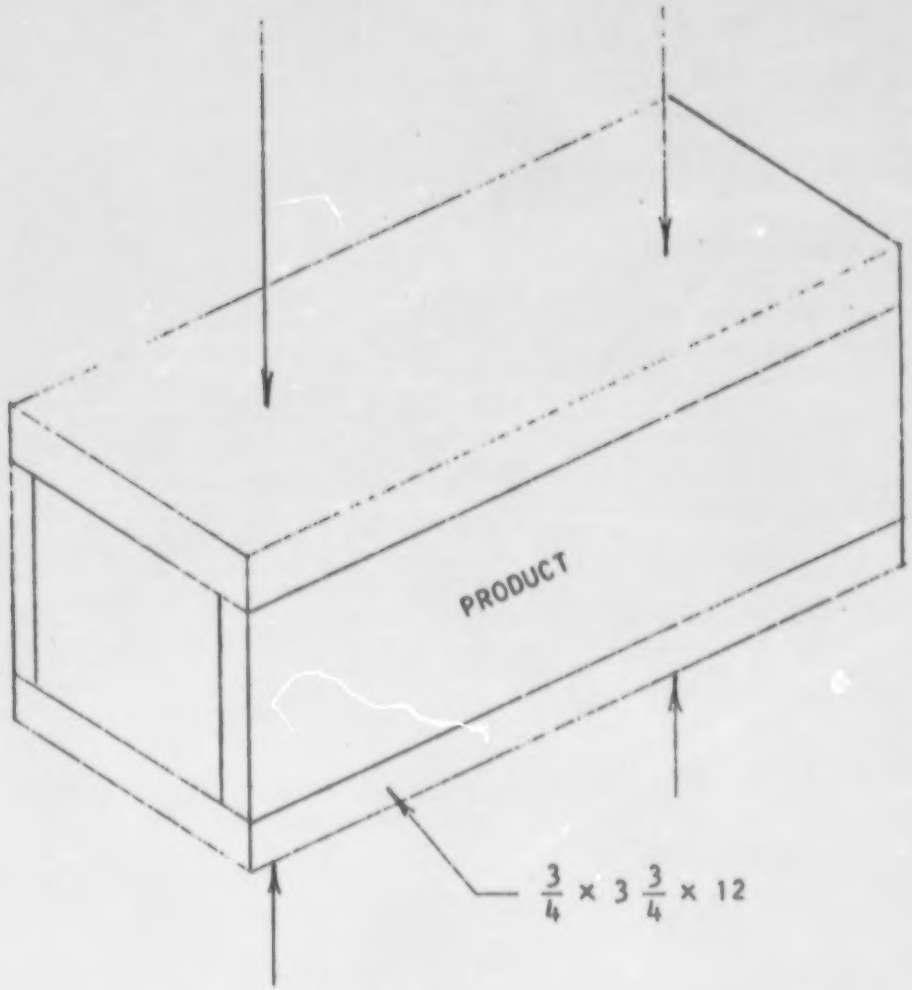

Title: Candy Box Assembly Fixt. (Bottom)	Serial No.	Sheet 14 of 15
Company:	Model No.	
Date:	Part No.	

CANDY BOX

PRODUCTION ORDER

	Operation	Machine	Worker	#Fin.	#Rej.	#Com.
1	Rgh. sand ends	Disc sander				
2	Sand ends	Belt sander				
3	Sand sides	Belt sander				
4	Finish sanding	Hand				
5	Finish	Hand				
6	Put on felt tabs	Hand				
7	Assemble	Hand				
8	Package	Hand				

Serial No.

Model No.

Model Name: Candy Box

Sheet 15 of 15

Part: (Bottom to Body

Part Name: Processes after asby.

No. Needed: No. Started: No. Rejects:

LINE PRODUCTION ACTIVITY #11

CIGARETTE BOX

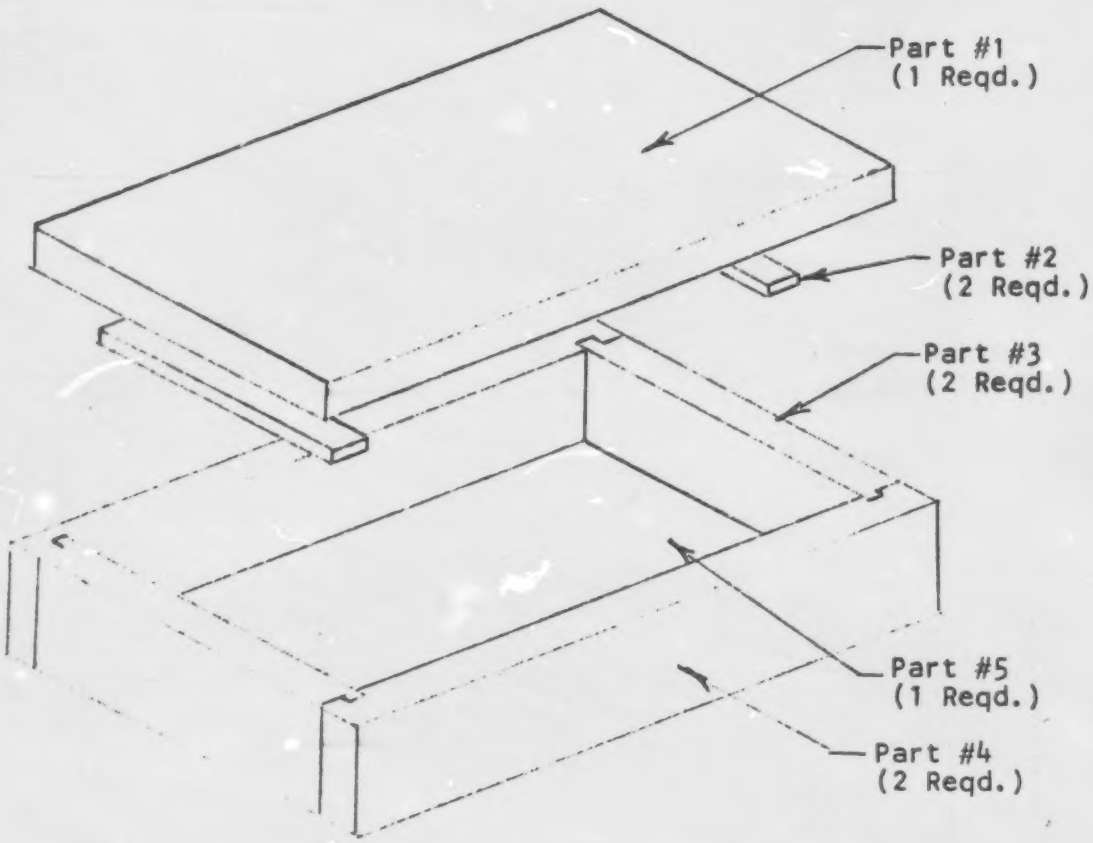

Title: Cigarette Box	Serial No.	Sheet 1 of 12
Company:	Model No.	
Date:	Part No.	

CIGARETTE BOX

PRODUCTION ORDER

	Operation	Machine	Worker	#Fin.	#Rej.	#Com.
1	Surface to 3/8"	Surfacer				
2	Joint better edge	Jointer				
3	Rip to 4-1/16"	Var. Saw				
4	Joint to 4"	Jointer				
5	Crosscut to 6"	Var. Saw				
6	Smooth sides	B. Sander				
7	Smooth edges & ends	Hand				
8	Assemble cleats	Hand				
9	Finish sand	Hand				
10	Finish	Hand				
11	Assemble	Hand				
12	Package	Hand				

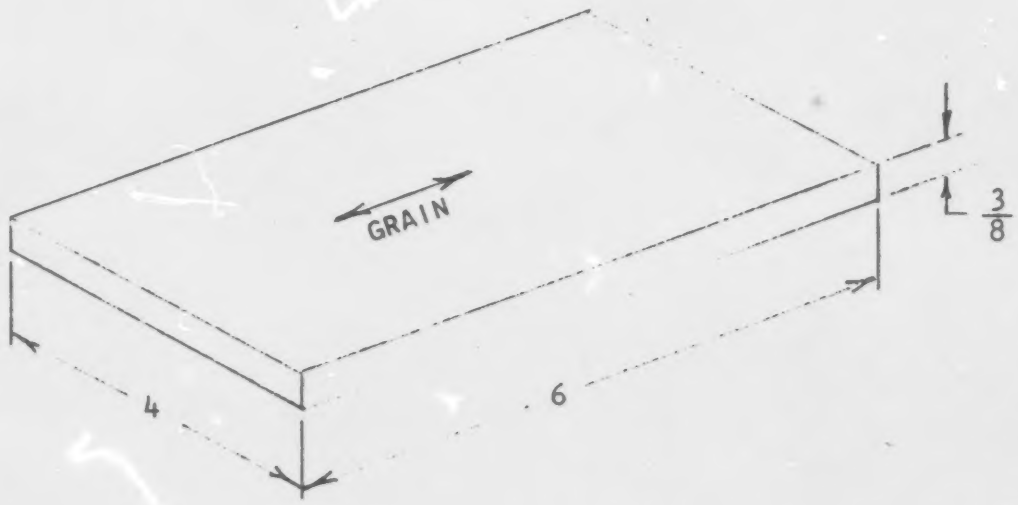

Serial No.	Sheet 2 of 12
Model No.	Part: #1
Model Name: Cigarette Box	Part Name: Top
No. Needed: No. Started:	No. Rejects:

CIGARETTE BOX

PRODUCTION ORDER

	Operation	Machine	Worker	#Fin.	#Rej.	#Com.
1	Rip to 3/8"	Var, Saw				
2	Surface 1st side 5/16"	Surfacer				
3	Surface 2nd side 1/4"	Surfacer				
4	Crosscut to 3-15/16"	Var. Saw				
5	Smooth	B. Sander				
6	Assemble	Hand				
7	Finish sand	Hand				
8	Finish	Hand				
9	Assemble	Hand				
10	Package	Hand				

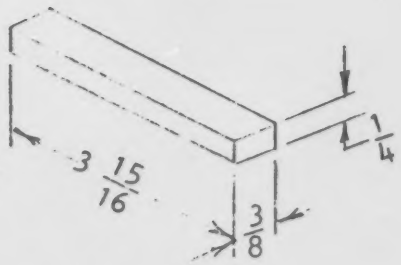

Serial No.

Model No.

Model Name: Cigarette Box

Sheet 3 of 12

Part: #2

Part Name: Cleat

No. Needed: No. Started: No. Rejects:

CIGARETTE BOX

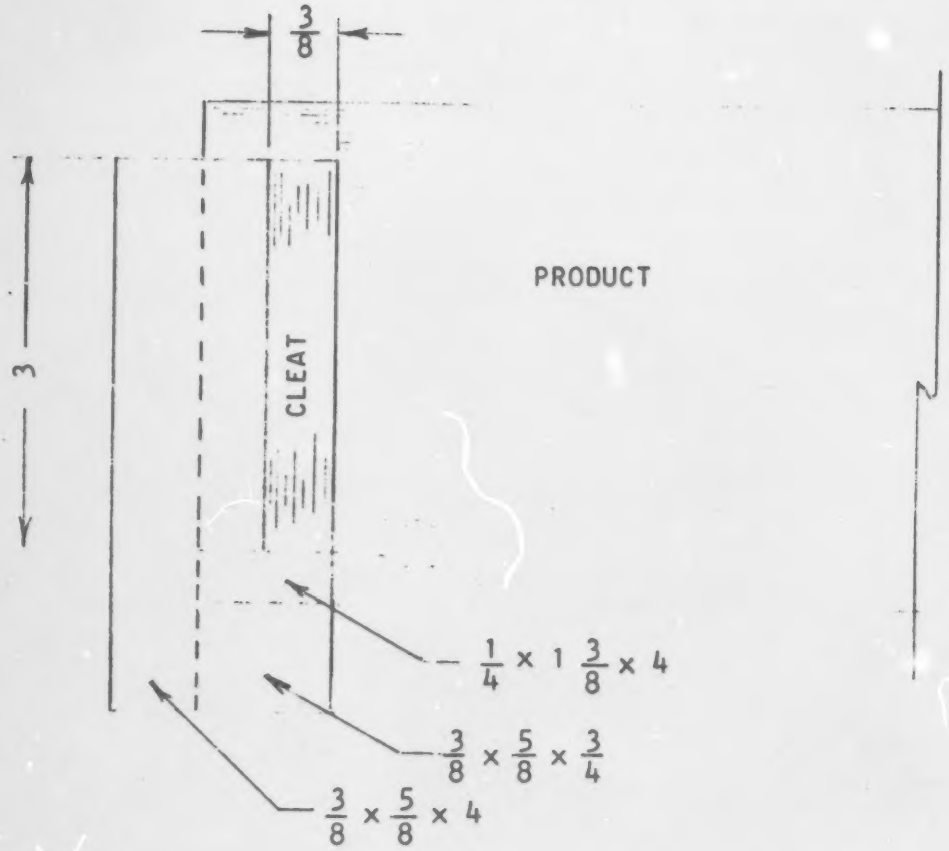

Title: Cigarette Box Assemble Fixture (Cleats)	Serial No.	Sheet 4 of 12
Company:	Model No.	
Date:	Part No.	

CIGARETTE BOX

PRODUCTION ORDER

	Operation	Machine	Worker	#Fin.	#Rej.	#Com.
1	Surface to 3/8"	Surfacer				
2	Joint better edge	Jointer				
3	Rip to 1-3/8" *	Var. Saw				
4	Crosscut to 3-1/2" *	Var. Saw				
5	Sand inside side	B. Sander				
6	Assemble	Hand				

* Ripping operation also does groove. (see tooling).
* Crosscut operation also does dado. (see tooling).

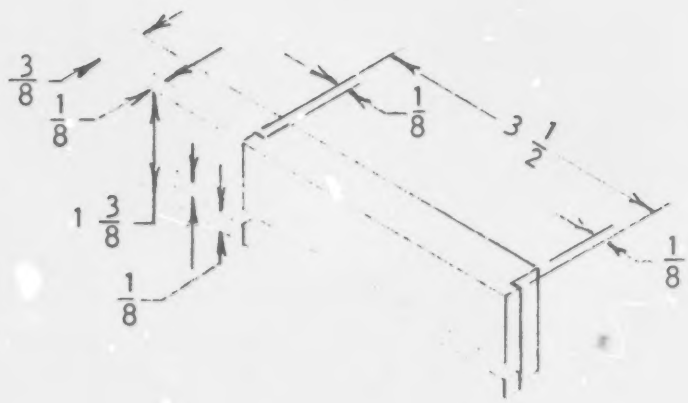

Serial No.
Model No.
Model Name: Cigarette Box

Sheet 5 of 12
Part: #3
Part Name: Ends

No. Needed: No. Started: No. Rejects:

CIGARETTE BOX

PRODUCTION ORDER

	Operation	Machine	Worker	#Fin.	#Rej.	#Com.
1	Surface to 3/8"	Surfacer				
2	Joint better edge	Jointer				
3	Rip to 1-3/8" *	Var. Saw				
4	Crosscut to 6" *	Var. Saw				
5	Smooth inside	B. Sander				
6	Assemble	Hand				

* Ripping operation also does groove. (see tooling).
* Crosscut operation also does dado. (see tooling.

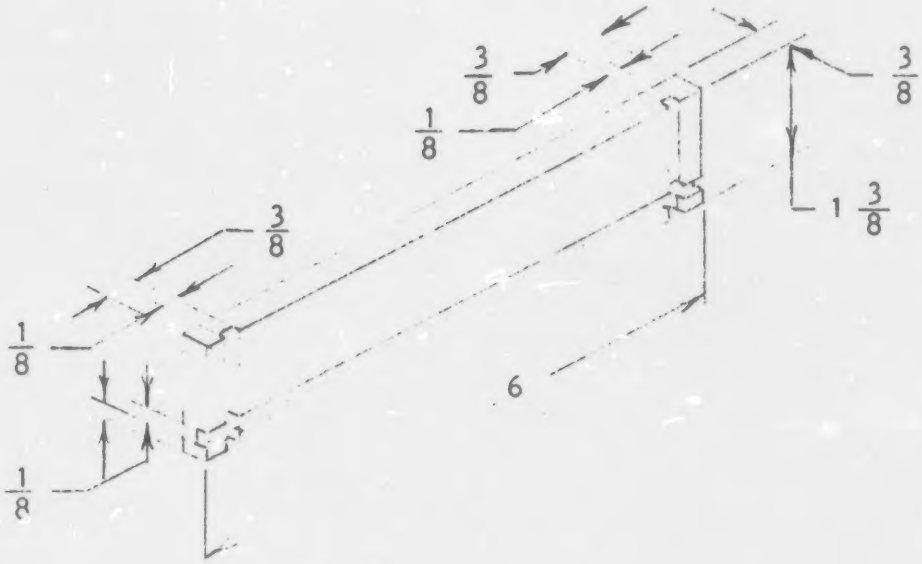

Serial No.

Sheet 6 of 12

Model No.

Part: #5

Model Name: Cigarette Box

Part Name: Side

No. Needed: No. Started: No. Rejects:

CIGARETTE BOX

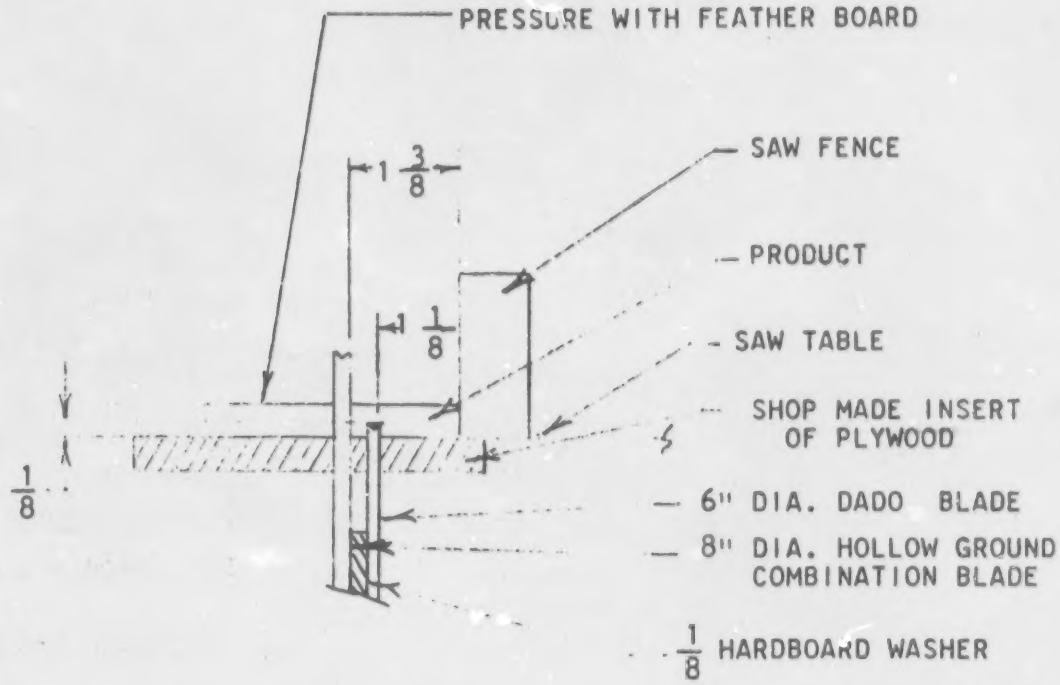

Title: Cigarette Box Tooling for ripping sides and ends	Serial No.	Sheet 7 of 12
Company:	Model No.	
Date:	Part No.	

CIGARETTE BOX

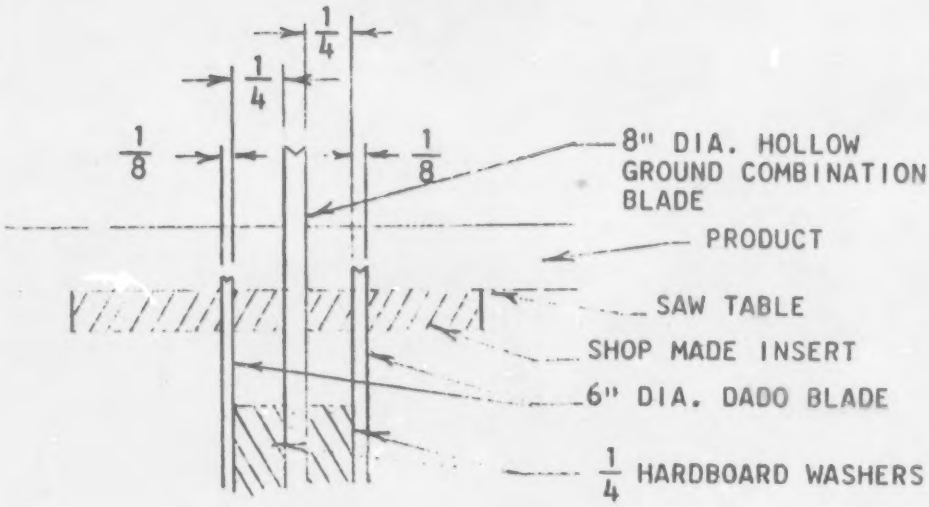

Title: Cigarette Box Tooling for crosscutting Sides to Length.	Serial No.	Sheet 8 of 12
Company:	Model No.	
Date:	Part No.	

CIGARETTE BOX

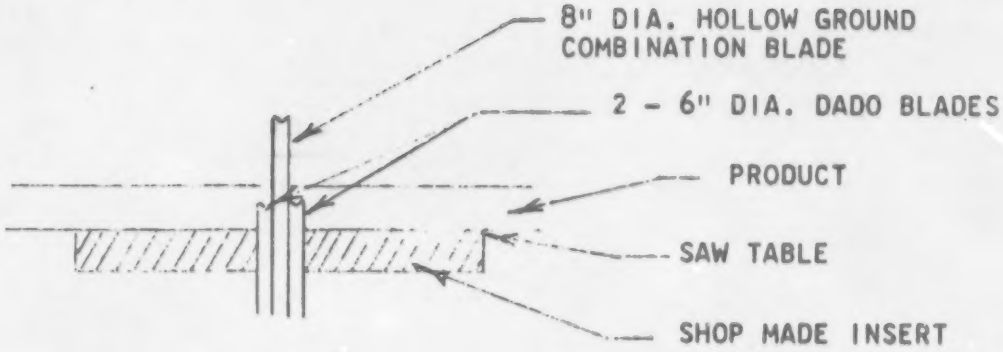

Title: Cigarette Box Tooling for crosscutting ends to length,	Serial No.	Sheet 9 of 12
Company:	Model No.	
Date:	Part No.	

CIGARETTE BOX

PRODUCTION ORDER

	Operation	Machine	Worker	#Fin.	#Rej.	#Com.
1	Crosscut to 12 Face	P. Cutter				
2	Rip to 4 Face	P. Cutter				
3	Rip to 12 Core	P. Cutter				
4	Crosscut to 4 core	P. Cutter				
5	Press	Press				
6	Sand both sides	Port. Belt				
7	Joint better edge	Jointer				
8	Rip to 3-1/2"	Var. Saw				
9	Crosscut to 5-1/2"	Var. Saw				
10	Assemble	Hand				

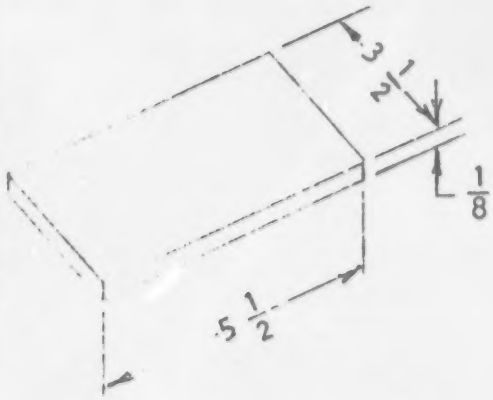

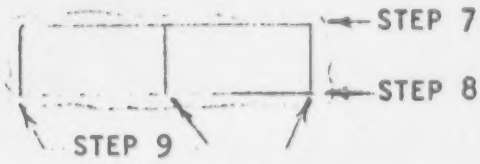

CUTTING SEQUENCE

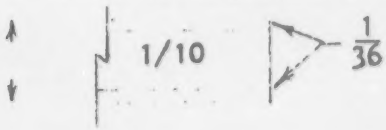

PLYWOOD CONST.

Serial No.	Sheet 10 of 12
Model No.	Part: #5
Model Name: Cigarette Box	Part Name: Bottom
No. Needed: No. Started:	No. Rejects:

CIGARETTE BOX

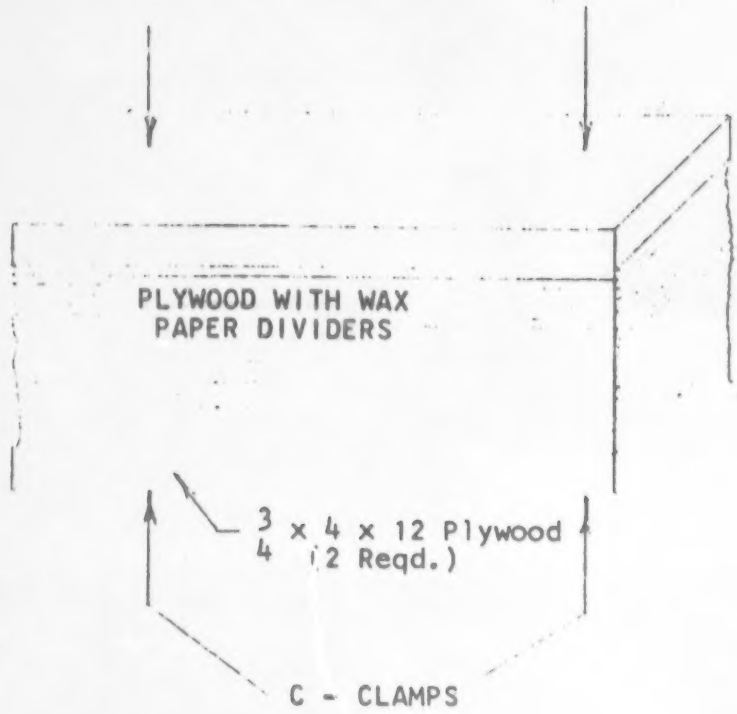

Title: Cigarette Box Plywood Press	Serial No.	Sheet 11 of 12
Company:	Model No.	
Date:	Part No.	

CIGARETTE BOX

PRODUCTION ORDER

	Operation	Machine	Worker	#Fin.	#Rej.	#Com.
1	Sand top & bottom	B. Sander				
2	Plug groove ends	Hand				
3	Sand sides & ends	B. Sander				
4	Finish Sand	Hand				
5	Finish	Hand				
6	Put on felt tabs	Hand				
7	Assemble	Hand				
8	Package	Hand				

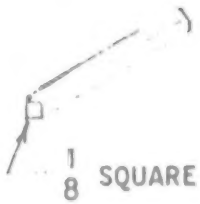

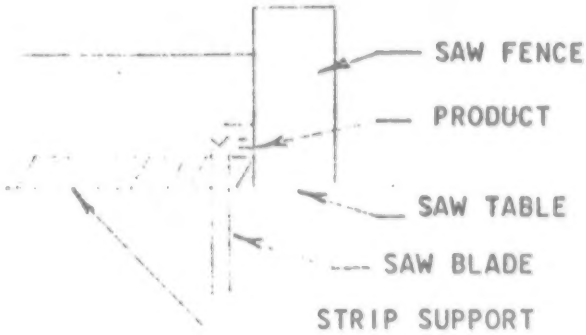

Serial No.	Sheet 12 of 12
Model No.	Part:
Model Name: Cigarette Box	Part Name: Processes after asby.

LINE PRODUCTION ACTIVITY #10

LETTER TRAY

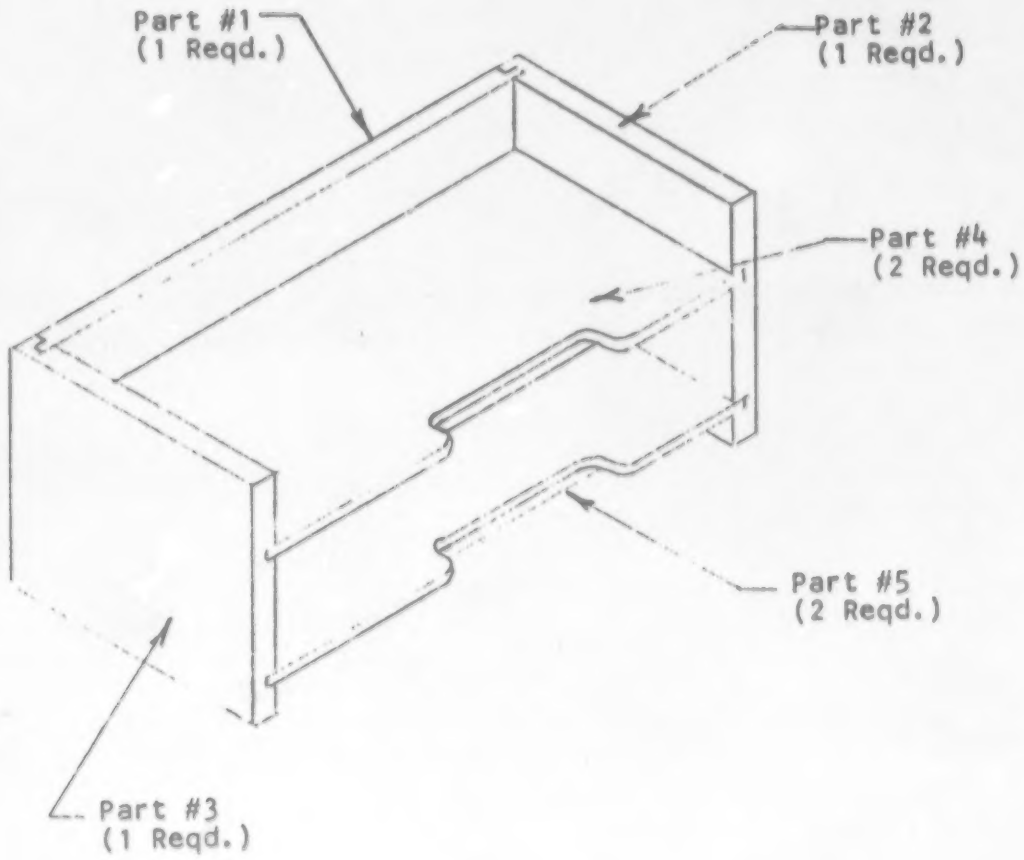

Title: Letter Tray	Serial No.	Sheet 1 of 8
Company:	Model No.	
Date:	Part No.	

LETTER TRAY

PRODUCTION ORDER

	Operation	Machine	Worker	#Fin.	#Rej.	#Com.
1	Edge to edge glue	If necessary				
2	Joint better side	Jointer				
3	Surface to 1/2"	Surfacer				
4	Joint better edge	Jointer				
5	Rip to 4-3/16"	Var. Saw				
6	Joint to 4-1/8"	Jointer				
7	Crosscut better end	Var. Saw				
8	Cross cut to 12-1/4"	Var. Saw				
9	Cut rabbets	Var. Saw				
10	Cut grooves	Var. Saw				
11	Smooth inside surf.	P. Belt Sand.				
12	Assemble	Hand				

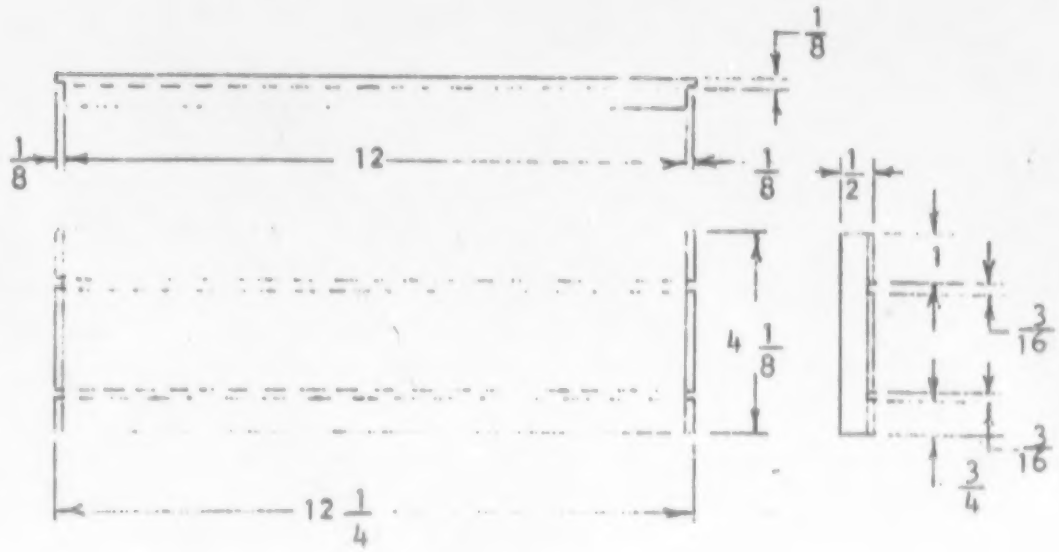

Serial No.
Model No.
Model Name: Letter Tray

Sheet 2 of 8
Part: #1
Part Name: Back

LETTER TRAY

PRODUCTION ORDER

	Operation	machine	Worker	#Fin.	#Rej.	#Com.
1	Edge to edge glue	If necessary				
2	Joint better side	Jointer				
3	Surface to 1/2"	Surfacer				
4	Joint better edge	Jointer				
5	Rip to 4-3/16"	Var. Saw				
6	Joint to 4-1/8"	Jointer				
7	Crosscut better end	Var. Saw				
8	Crosscut to 9-1/4"	Var. Saw				
9	Cut dado	Var. Saw				
10	Cut grooves	Var. Saw				
11	Cut mortise 3/8" Dp.	D. Press				
12	Smooth inside surf.	P. Belt sand.				
13	Assemble	Hand				

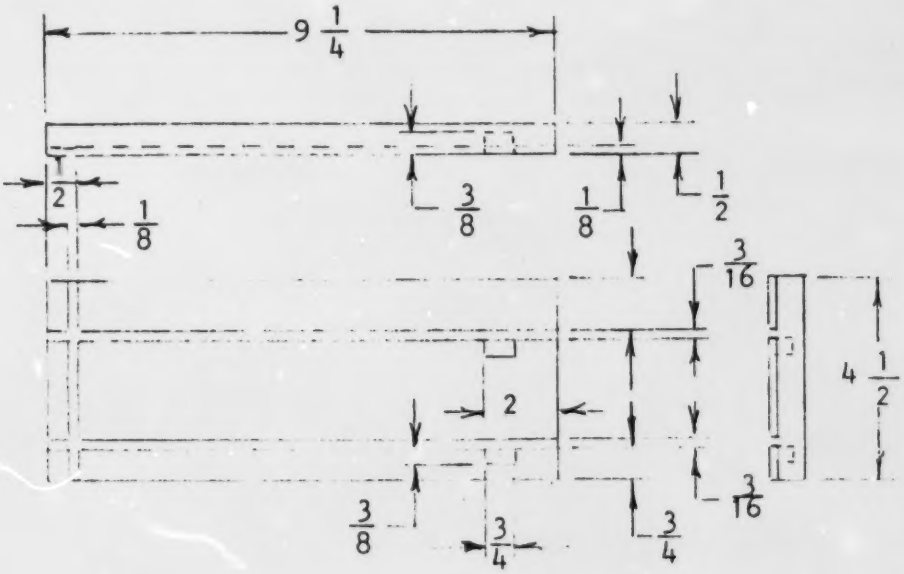

Serial No.

Sheet 3 of 8

Model No.

Part: #2

Model Name: Letter Tray

Part Name: Right Side

No. Needed: No. Started: No. Rejects:

LETTER TRAY

PRODUCTION ORDER

	Operation	Machine	Worker	#Fin.	#Rej.	#Com.
1	Edge to edge glue	If Necessary				
2	Joint better side	Jointer				
3	Surface to 1/2"	Surfacer				
4	Joint better edge	Jointer				
5	Rip to 4-3/16"	Var. Saw				
6	Joint to 4-1/8"	Jointer				
7	Crosscut better end	Var. Saw				
8	Crosscut to 9-1/4"	Var. Saw				
9	Cut dado	Var. Saw				
10	Cut grooves	Var. Saw				
11	Cut mortise 3/8" Dp.	D. Press				
12	Smooth inside surf.	P.Belt sand.				
13	Assemble	Hand				

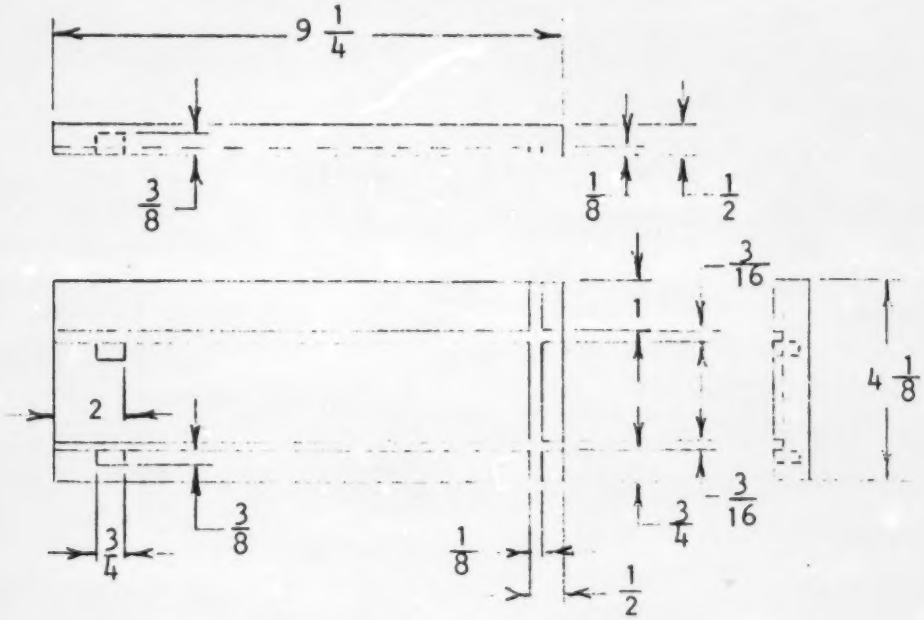

Serial No.	Sheet 4 of 8
Model No.	Part: #3
Model Name: Letter Tray	Part Name: Left Side

No. Needed: No. Started: NO. Rejects:

LETTER TRAY

PRODUCTION ORDER

	Operation	Machine	Worker	#Fin.	#Rej.	#Com.
1	Joint better side	Jointer				
2	Surface to 3/4"	Surfacer				
3	Rip to 1/2"	Var. Saw				
4	Surface one side 7/16"	Surfacer				
5	Surface other side 3/8"	Surfacer				
6	Crosscut better end	Var. Saw				
7	Crosscut to 12-3/4"	Var. Saw				
8	Smooth sides & edges	Hand				
9	Assemble	Hand				

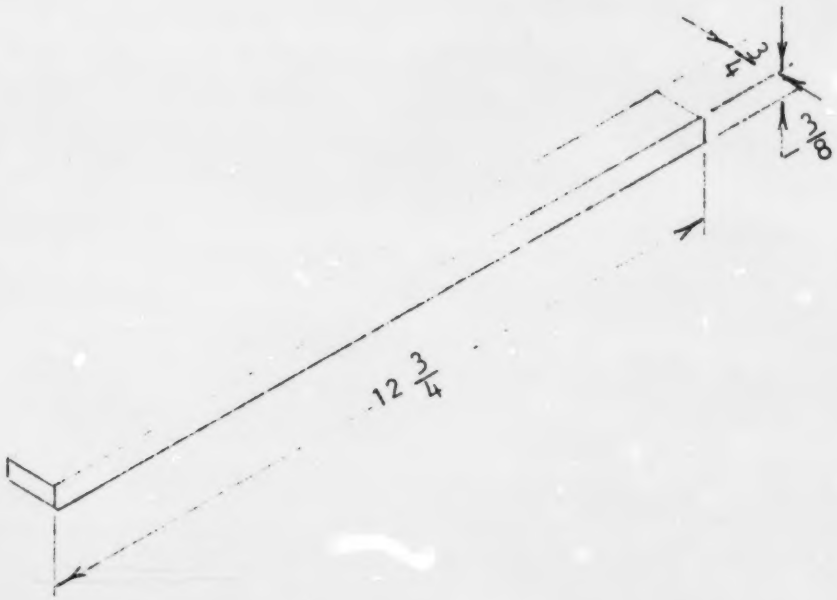

Serial No.

Model No.

Model Name: Letter Tray

Sheet 5 of 8

Part: #5

Part Name: Spreader

No. Needed: No. Started: No. Rejects:

LETTER TRAY

PRODUCTION ORDER

	Operation	Machine	Worker	#Fin.	#Rej.	#Com.
1	Rip to 12-1/4"	Var. Saw				
2	Crosscut to 9"	Var. Saw				
3	Route finger slot	Router				
4	Soften all arrises	Hand				
5	Finish	Hand				
6	Assemble	Hand				

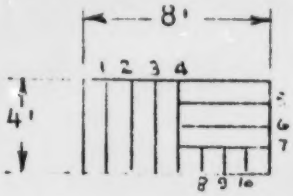

LAYOUT OF 4' x 8" piece of Hardboard.

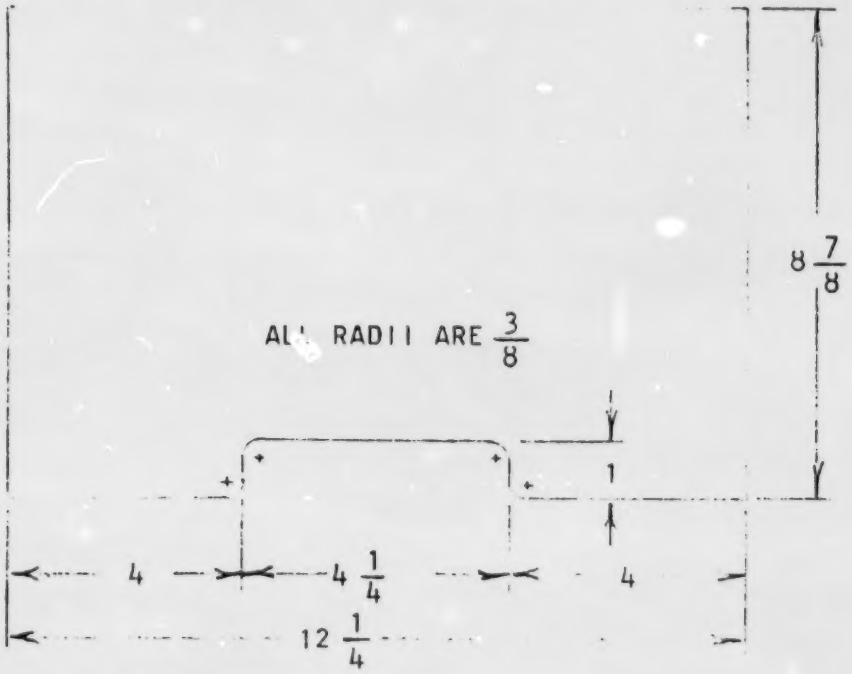

Serial No.

Model No.

Model Name: Letter Tray

Sheet 6 of 8

Part: #4

Part Name: Shelves

No. Needed: No. Started: No. Rejects:

LETTER TRAY

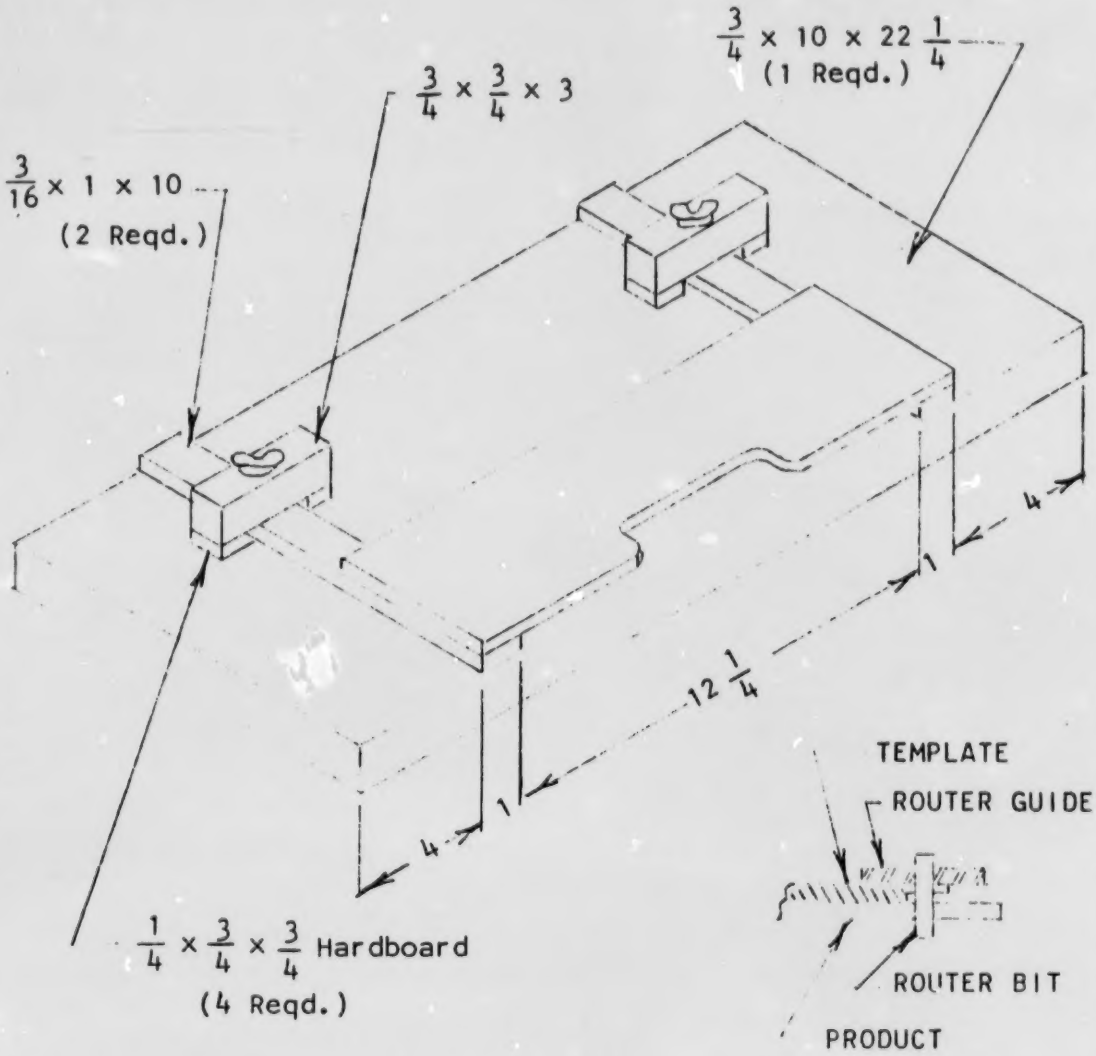

Title: Letter Tray Finger Space Router Jig	Serial No.	Sheet 7 of 8
Company:	Model No.	
Date:	Part No.	

LETTER TRAY

PRODUCTION ORDER

	Operation	Machine	Worker	#Fin.	#Rej.	#Com.
1	Fill holes	Plugs				
2	Fill defects	Stick lacquer				
3	Smooth	B. Sander				
4	Finish	Hand				
5	Assemble	Hand				
6	Put on felt tabs	Hand				
7	Package	Hand				

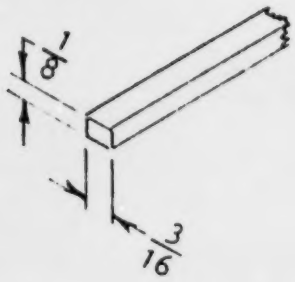

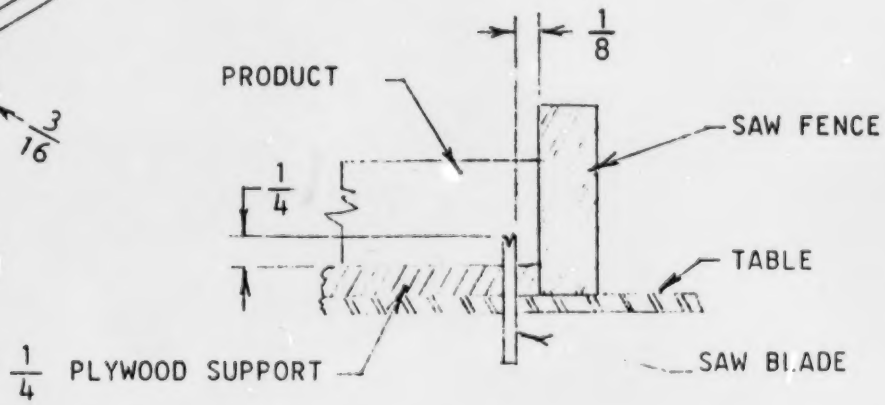

Serial No.	Sheet 8 of 8
Model No.	Part:
Model Name: Letter Tray	Part Name: Processes after asby.

COASTER

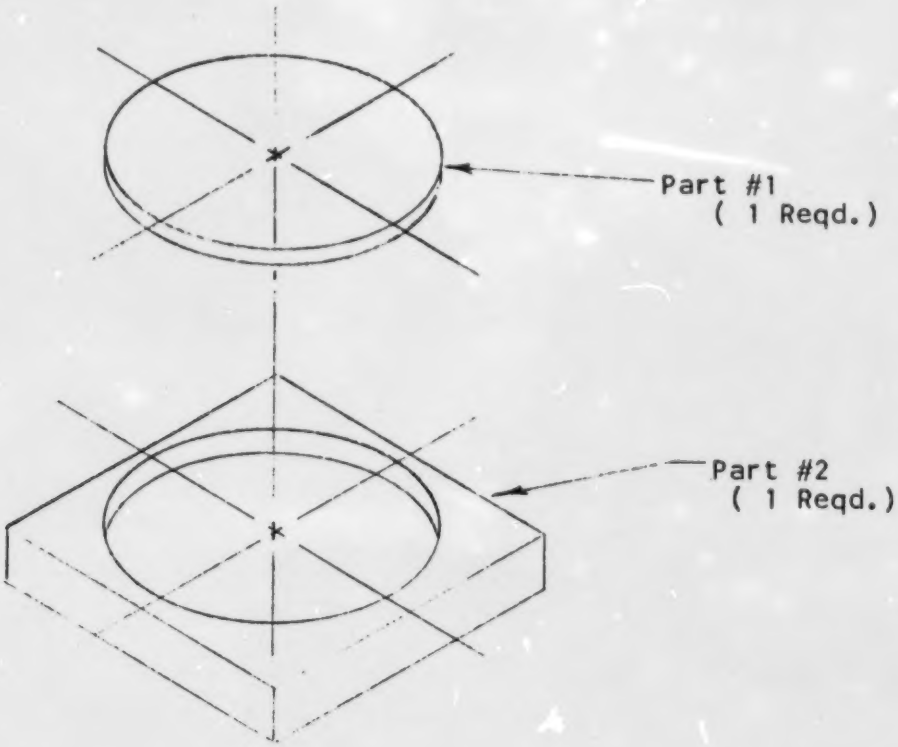

Title: Coaster	Serial No.	Sheet 1 of 6
Company:	Model No.	
Date:	Part No.	

COASTER

PRODUCTION ORDER

	Operation	Machine	Worker	#Fin.	#Rej.	#Com
1	Die Cut	Arbor or D. Press or Vise				
2	Assemble	Hand				

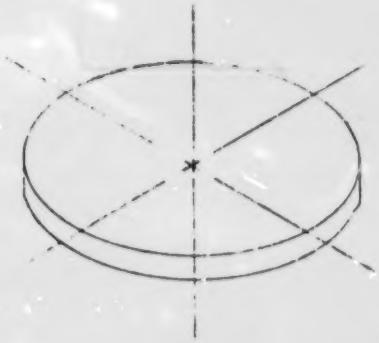

$2\frac{3}{4}$ Dia. x $\frac{1}{16}$ Thk.

Serial No.

Model No.

Model Name: Coaster

Sheet 2 of 6

Part: #1

Part Name: Cork cushion

COASTER

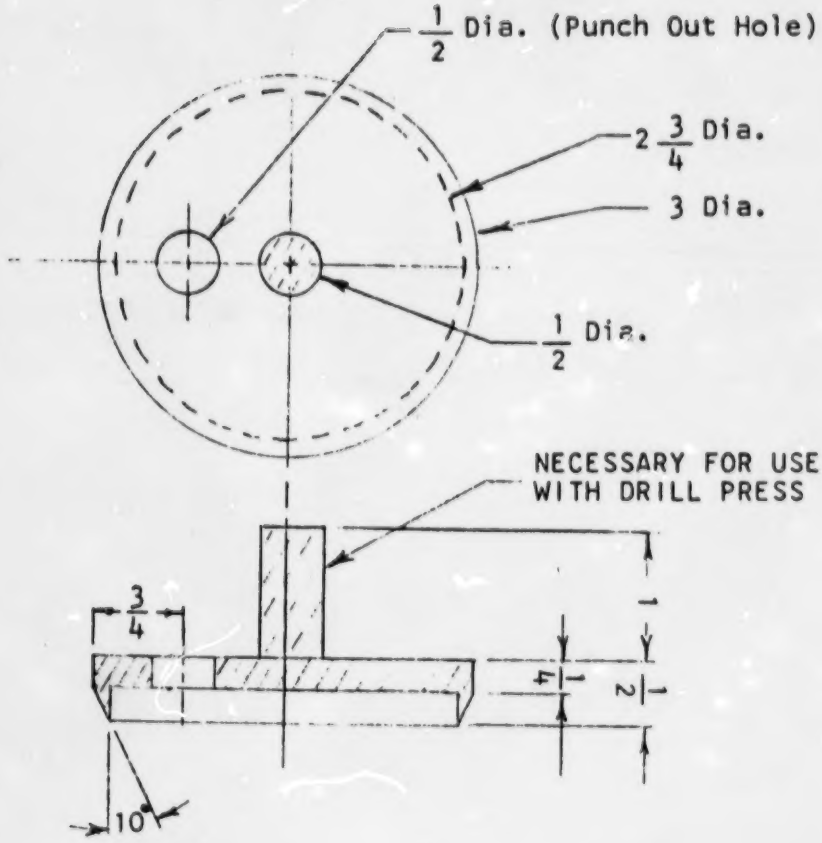

Scale: 3/4" = 1"

Title: Coaster Cork cushion cutting Die	Serial No.	Sheet 3 of 6
Company:	Model No.	
Date:	Part No.	

COASTER

PRODUCTION ORDER

	Operation	Machine	Worker	#Fin.	#Rej.	#Com
1	Rip to 3-1/8"	B. Saw				
2	Crosscut to 3-1/8"	B. Saw				
3	Sand 1st Edge Sq.	B. Sander				
4	Sand to width (3")	B. Sander				
5	Sand 1st End Sq.	B. Sander				
6	Sand to length (3")	B. Sander				
7	Drill hole	D. Press				
8	Sand sides	B. Sander				
9	Finish sand	Hand				
10	Finish	Hand				
11	Assemble	Hand				
12	Package	Hand				

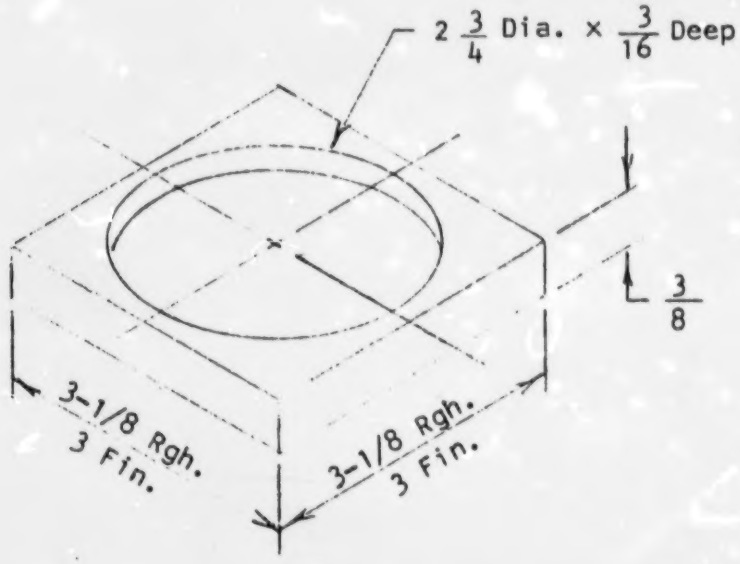

Serial No.	Sheet 4 of 6
Model No.	Part: #2
Model Name: Coaster	Part Name: Base

No. Needed: No. Started: No. Rejects:

COASTER

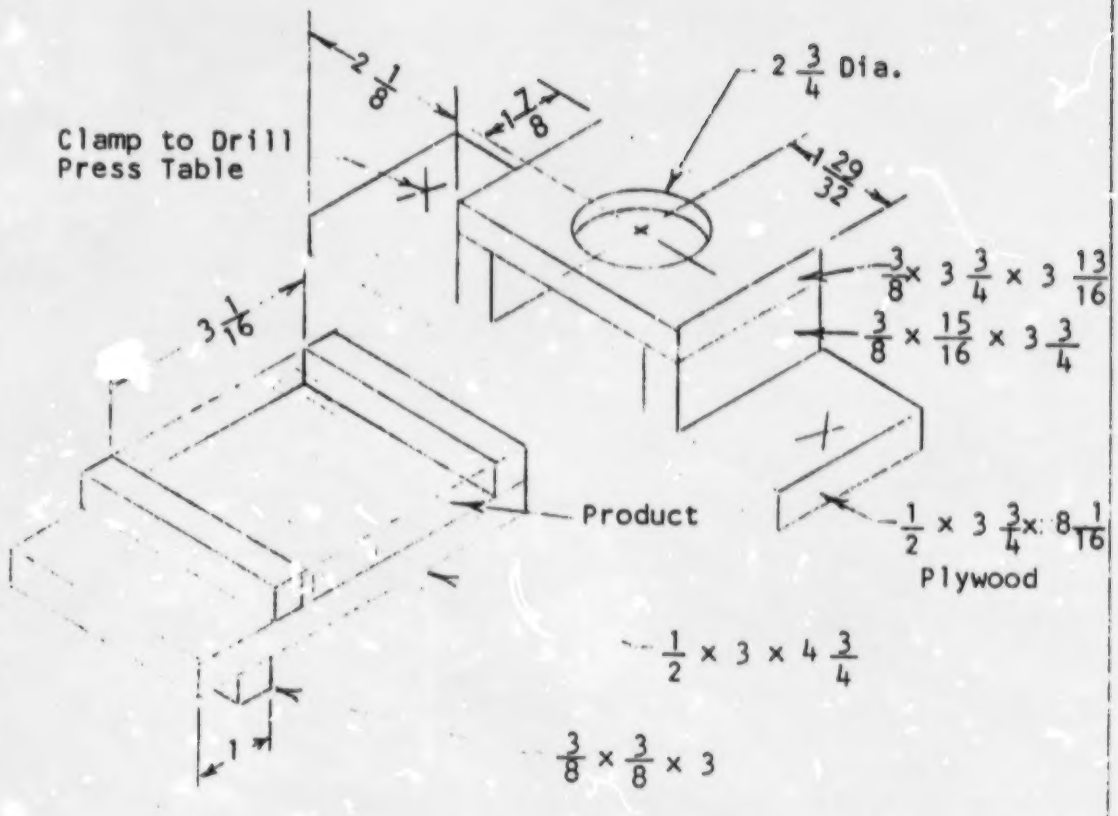

Title: Coaster Drill Press Fixture	Serial No.	Sheet 5 of 6
Company:	Model No.	
Date:	Part No.	

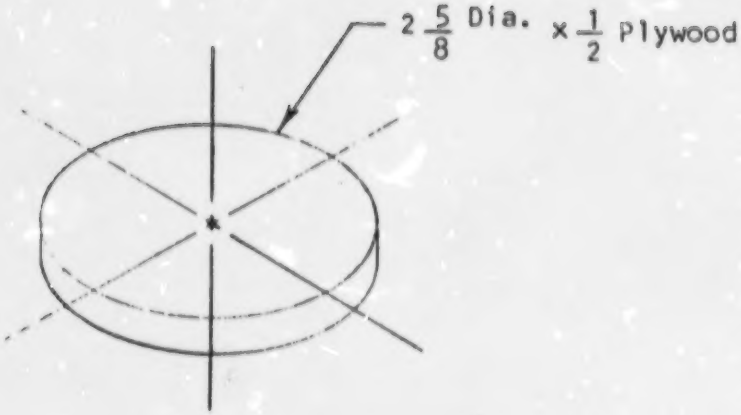

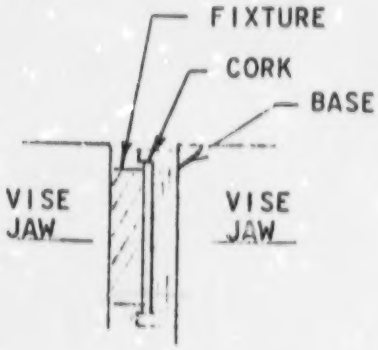

Title: Coaster Assembly Fixture	Serial No.	Sheet 6 of 6
Company:	Model No.	
Date:	Part No.	

LINE PRODUCTION ACTIVITY #8.

SALT AND PEPPER SHAKER

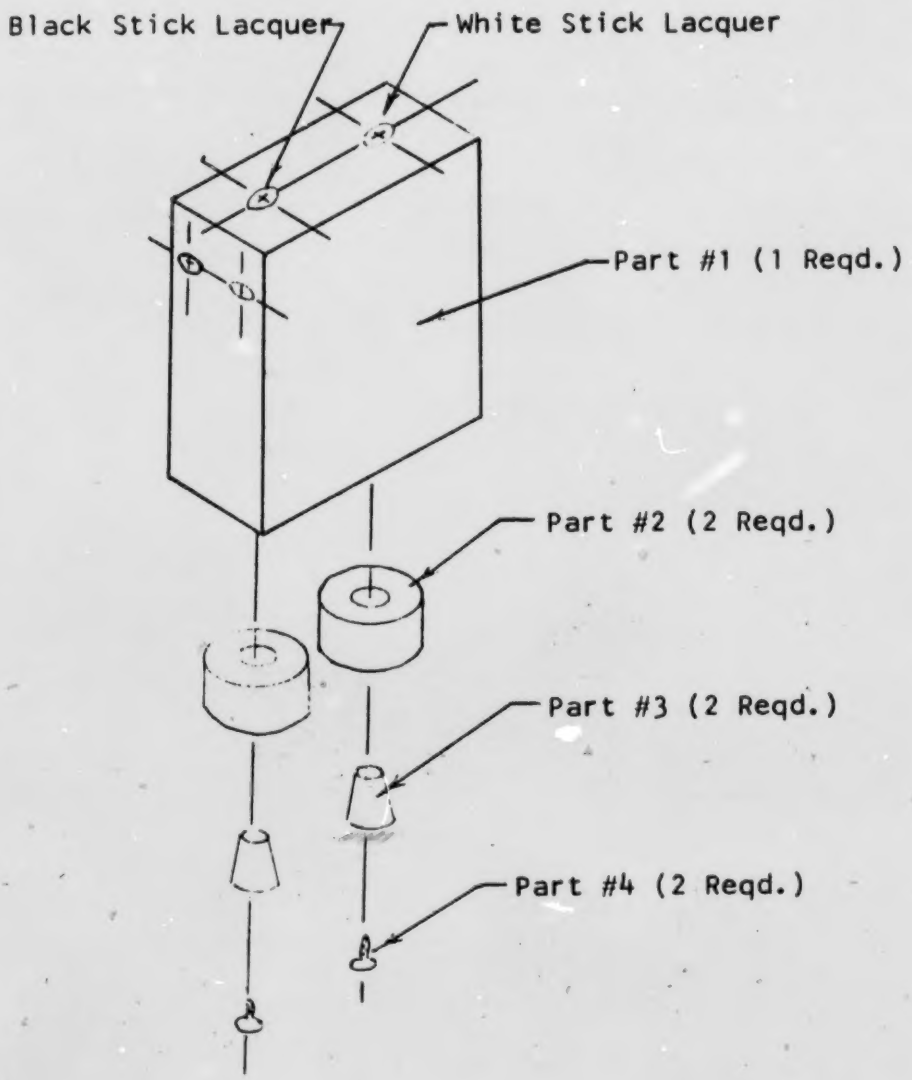

Title: Salt & Pepper Shaker	Serial No.	Sht. 1 of 9
Company:	Model No.	
Date:	Part No.	

SALT & PEPPER SHAKER

PRODUCTION ORDER

	Operation	Machine	Worker	#Fin.	#Rej.	#Com.
1	Rip to 2-7/8	B. Saw				
2	Crosscut to 3-1/16	B. Saw				
3	Drill 1" D. Hole	D. Press				
4	Drill Ind. Holes	3/32 D. P.				
5	Drill S&P 3/32	D. Press				
6	Sand edges & sides	B. Sand.				
7	Fill Ind. Holes	Hand				
8	Sand top	B. Sand.				
9	Sand to lgth.(3)	D. Sand.				
10	Finish sand	Hand				
11	Assembly					

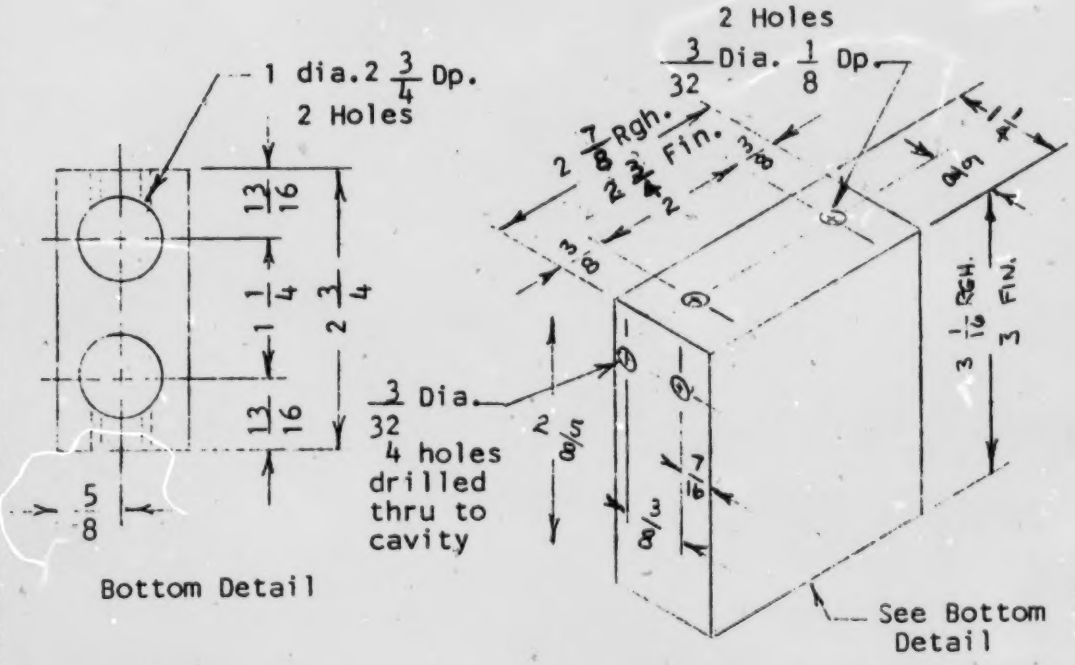

Serial No.	Sheet 2 of 9
Model No.	Part #1
Model Name: Salt & Pepper Shaker	Part Name: Body
No. Needed: No. Started:	Rejects:

SALT & PEPPER SHAKER

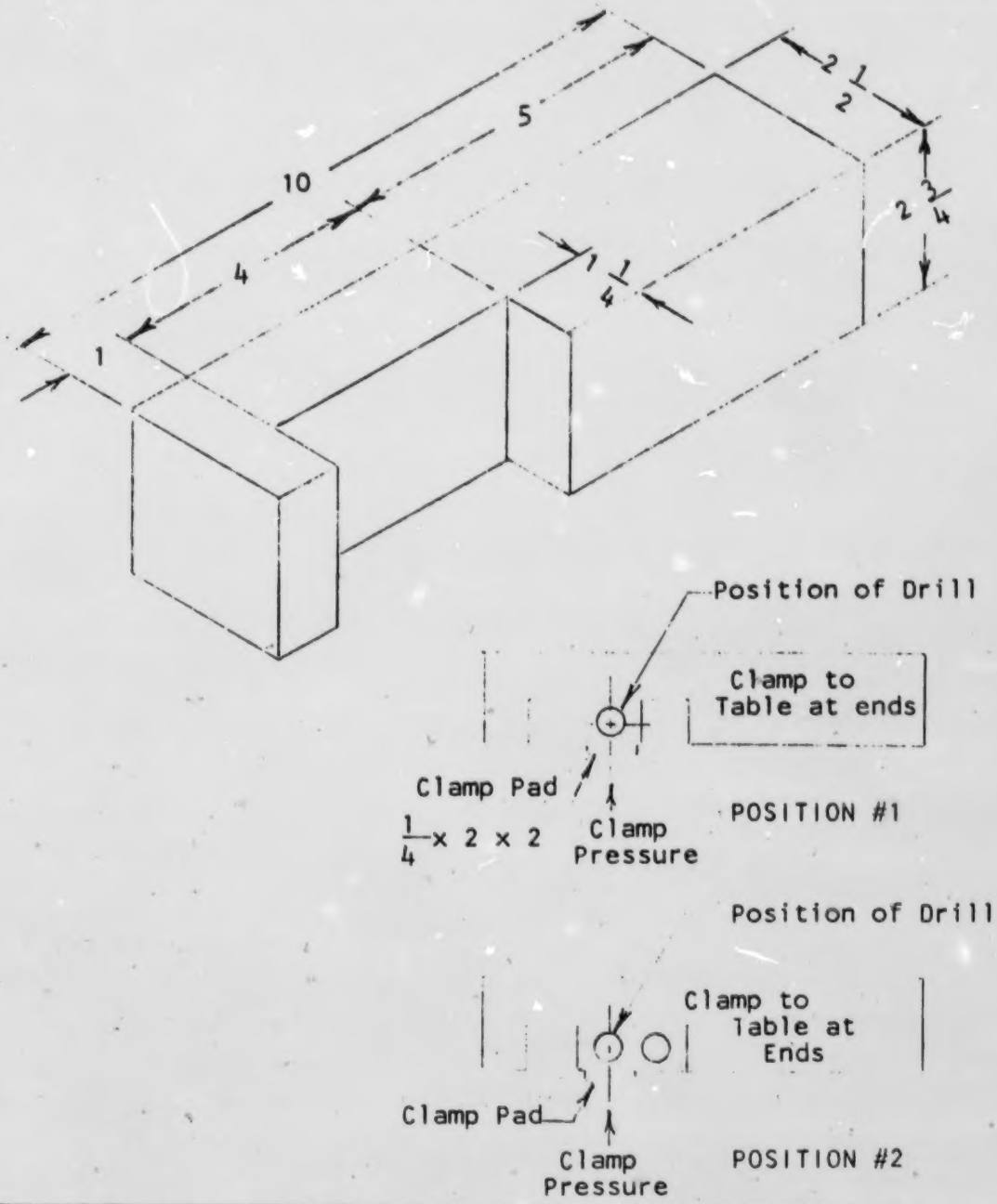

Title: Drill Fixture Part #1 Cavity	Serial No.	Sheet 3 of 9
Company:	Model No.	
Date:	Part No.	

SALT & PEPPER SHAKER

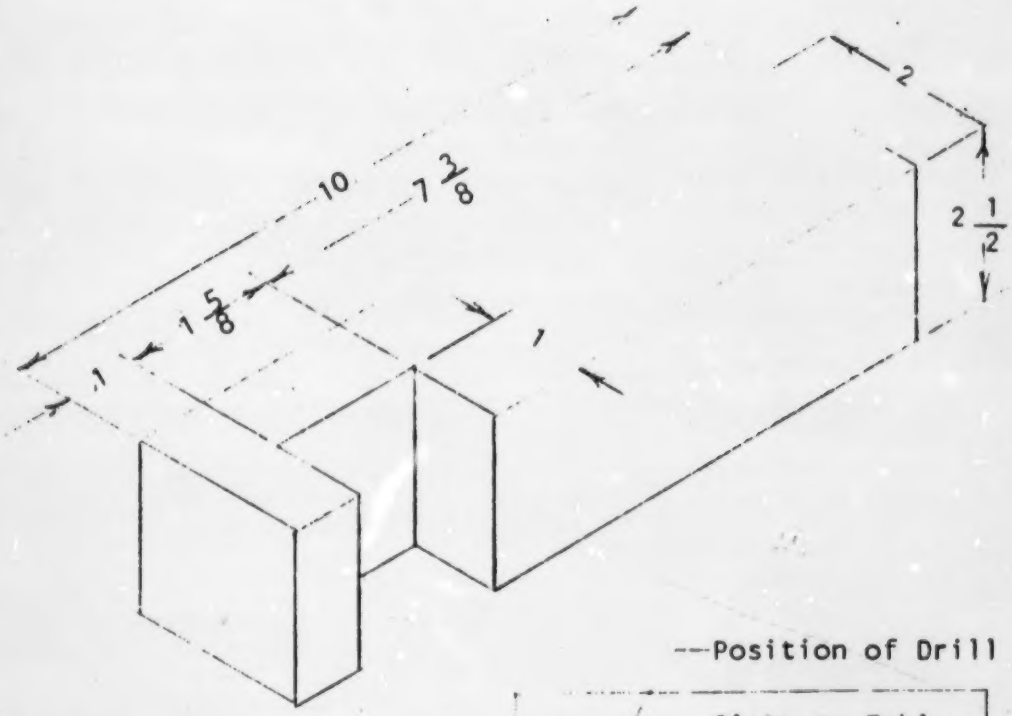

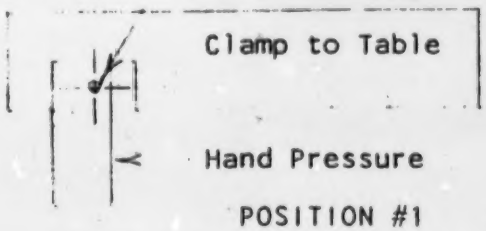

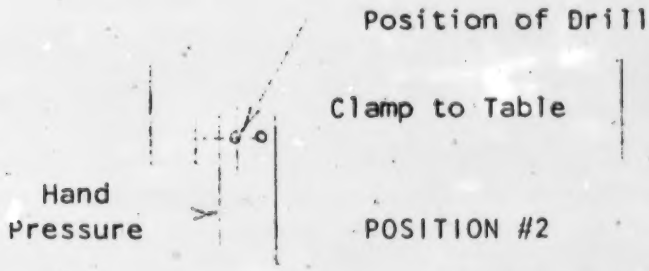

Title: Drilling Fixt. Part 1 S & P Holes Identification holes	Serial No.	Sheet 4 of 9
Company:	Model No.	
Date:	Part No.	

SALT & PEPPER SHAKER

PRODUCTION ORDER

	Operation	Machine	Worker	#Fin.	#Rej.	#Com
1	Cut to lgth. 3/4	B. Saw				
2	Drill Hole 3/8	Drill Press				
3	Sand one end	B. Sander				
4	Assembly					

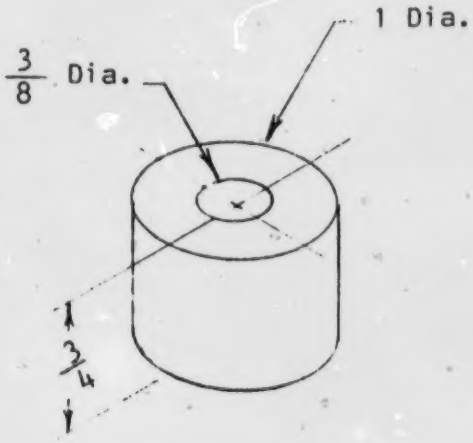

Serial No.

Sheet 5 of 9

Model No.

Part: #2

Model Name: Salt & Pepper Shaker

Part Name: Hole Reducer

No. Needed:

No. Started:

Rejects:

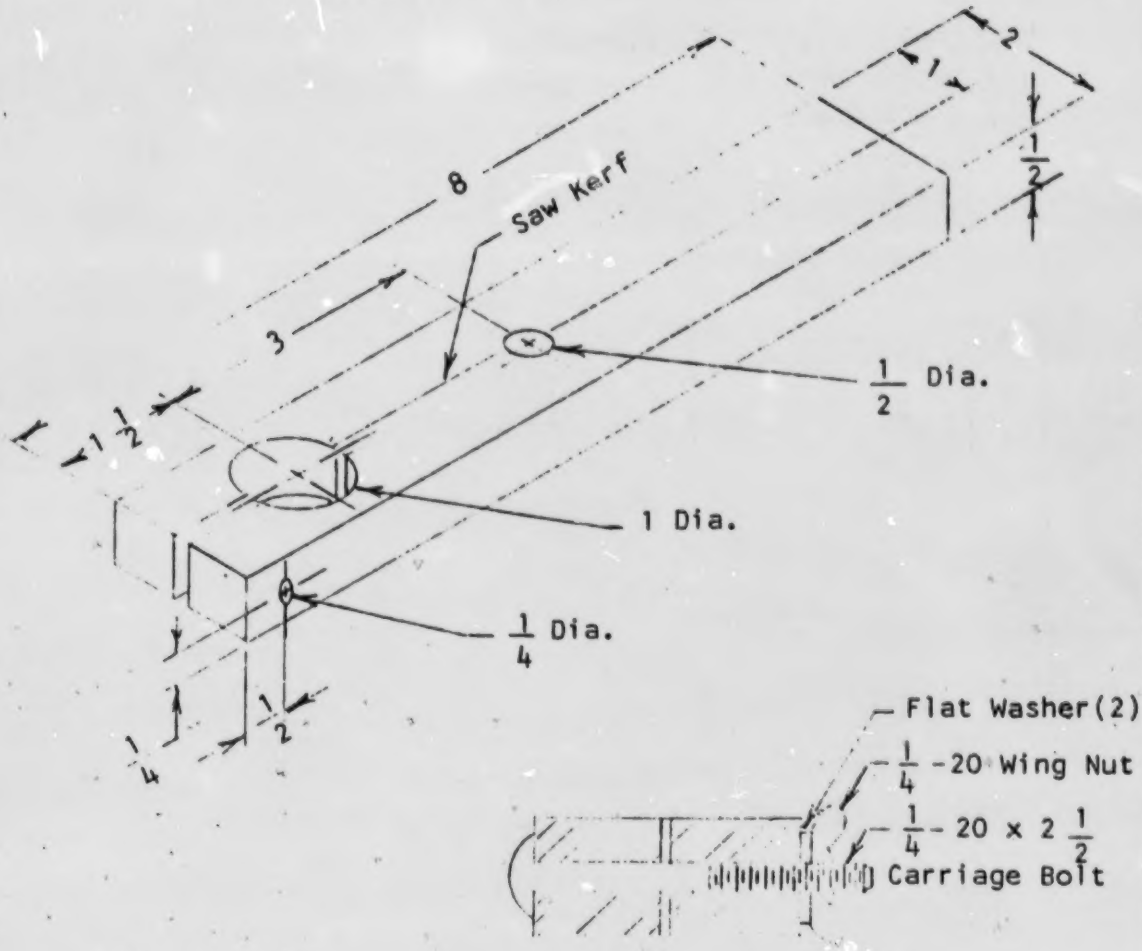

Title: Drilling Clamp (Part 2)	Serial No.	Sheet 6 of 9
Company:	Model No.	
Date:	Part No.	

SALT & PEPPER SHAKER

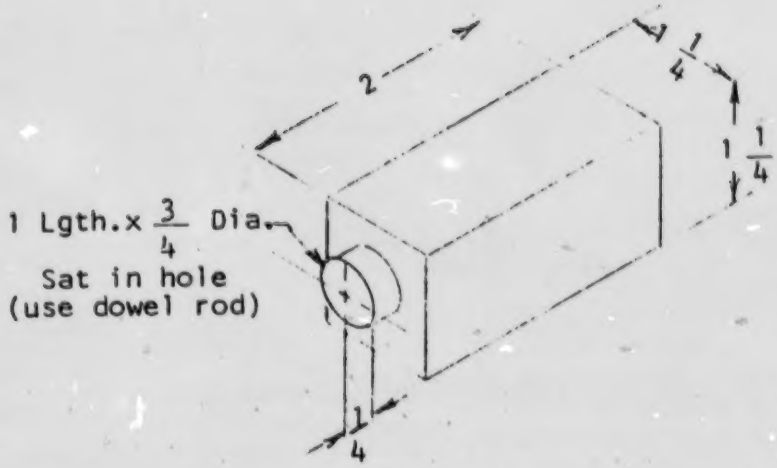

Title: Assembly Fixture	Serial No.	Sheet 7 of 9
Company:	Model No.	
Date:	Part No.	

SALT & PEPPER SHAKER

PRODUCTION ORDER

	OPeration	Machine	Worker	#Fin.	#Rej.	#Com.
1	Turn screw in cork	Hand				

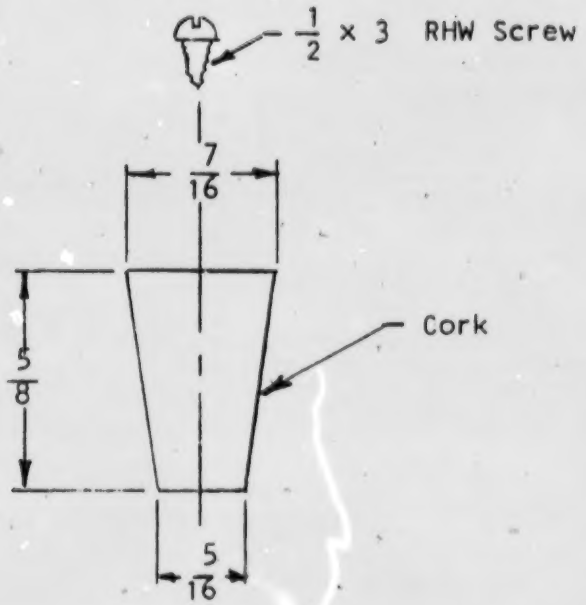

Serial No.	Sheet 8 of 9
Model No.	Part: #3 & #4
Model Name: Salt & Pepper Shaker	Part Name: Cork and Screw

No. Needed: No. Started: Rejects:

SALT & PEPPER SHAKER

PRODUCTION ORDER

	Operation	Machine	Worker	#Fin.	#Rej.	#Com.
1	Insert hole					
	Reducer in body	Hand				
2	Sand bottom	D. Sander				
3	Finish Sand	Hand				
4	Finish	Hand				
5	Assemble cork					
	& Screw	Hand				
6	Package					

Serial No.	Sheet 9 of 9
Model No.	Part:
Model Name: Salt & Pepper Shaker	Part Name: Processes after ably.
No. Needed: No. Started:	Rejects:

PEG PUZZLE

Part #2
Peg
Wood 1/8" x 1"

I-1	Inspect stock for possible defects
T-1	Transport to cutting jig
O-1	Cut to length
I-2	Inspect for proper length
T-2	Transport to sanding area
O-2	Sand untill smooth
I-3	Inspect pegs for proper size and shape
S-1	Store

PEG PUZZLE

Part #1
Peg Puzzle Board
Wood, 3 3/4" triangle

I-1	Inspect stock for possible defects
O1	Layout lines for angle cut
T-1	Transport to miter saw jig
O2	Cut out stock on miter saw jig
T-2	Move to the drilling jig
O3	Drill the peg holes
I-2	Inspect the hole placement and depth
T-3	Transport to the sanding area
O4	Sand all surfaces
I-3	Inspect for smoothness
T-5	Transport to the finishing area
O4	Finish with Watco Oil
D1	Drying time 4 hours
I-4	Final inspection
S1	Store

PEG PUZZLE

Peg Cut Off Jig

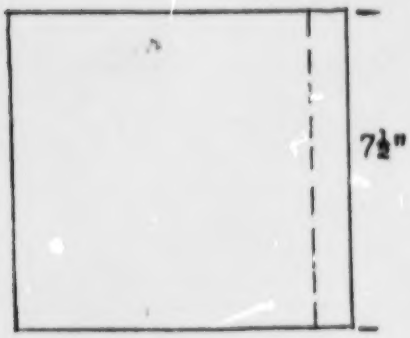

Top View

This jig will cut off 60 pegs at one time, (when using 1/8 inch dowel rods).

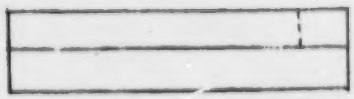

Side View

PEG PUZZLE

Drilling Jig

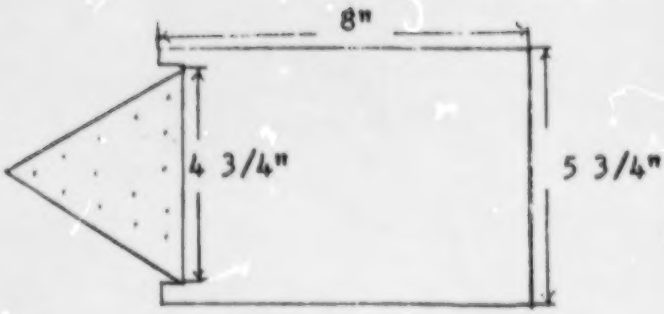

Top View

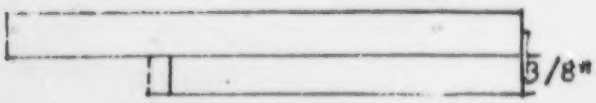

Side View (closed)

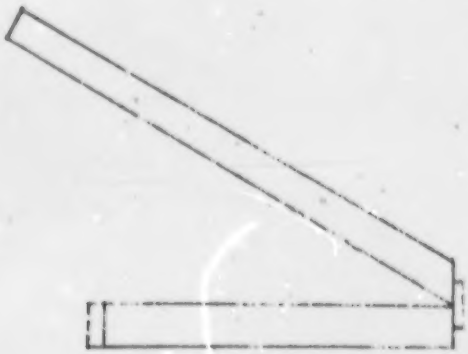

Side View (open)

This jig requires a hing to operate, it also requires that the bottom board be the same thickness as the puzzle.

Miter Box Jig

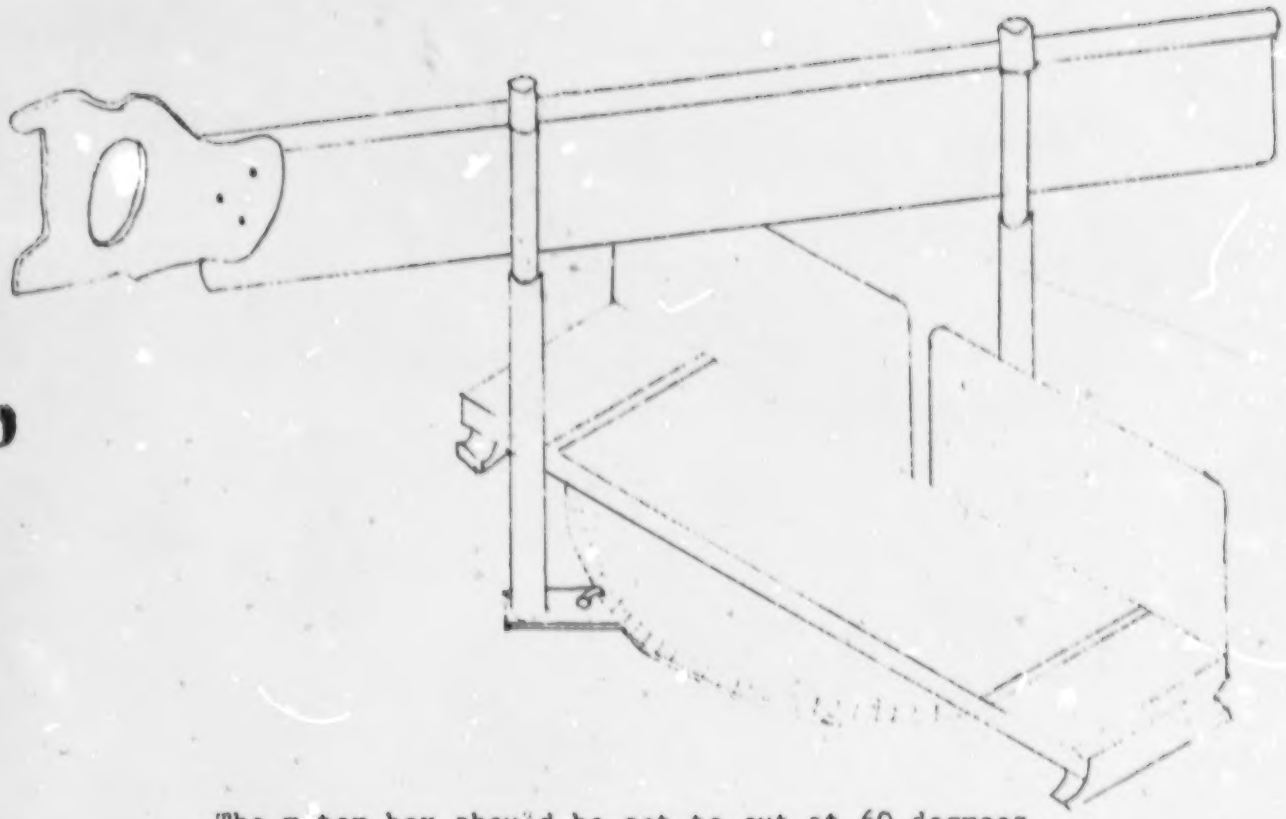

The miter box should be set to cut at 60 degrees, this is the angle of the puzzles shap.

LINE PRODUCTION ACTIVITY #7.

PEG PUZZLE

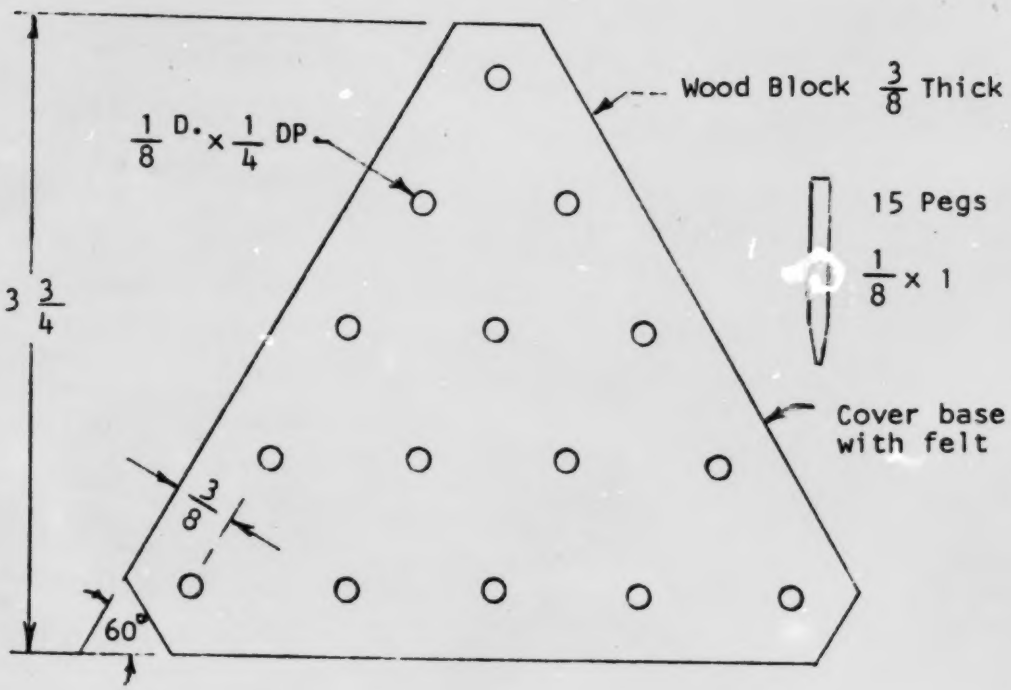

Place pegs in all except one corner hole. The object is to jump and remove pegs one at a time until only one of them is left. Jump only along the lines.

SPINNER

BILL OF MATERIALS: Based on producing 50 spinners.

	NUMBER	QUANTITY	STYLE	SIZE	NAME	WEIGHT
1.	AD6E2	100	1	2	Clevises	4 oz.
2.	AD7A1	100	1	.046	Spinner springs	4 oz.
3.	AG8A4	500	1	2	Beads	4 oz.
4.	AD4A6K	100	HN	1	Blades	8 oz.
5.	707	50	10	-	English Bait Hook	2 oz.
6.	LE3A4	100 Yd.	OX	.011	Leader	3 oz.

SPINNER

HOW DID YOU DO THIS TIME?

Take a real good look at the lures that you produced.

1. Are all knots tied properly?

2. Were all parts placed in their proper order?

3. Do the spinners rotate freely?

4. You made _____ lures in twelve minutes with an assembly line. How many did the class make in twelve minutes assembling them individually?

5. Which is the better method?

6. Why do you think this is true?

SPINNER

LET'S TRY IT!

Each of us will assemble a spinner by himself. We will see how many we can do in twelve minutes. Read the instructions carefully so you can make a good showing.

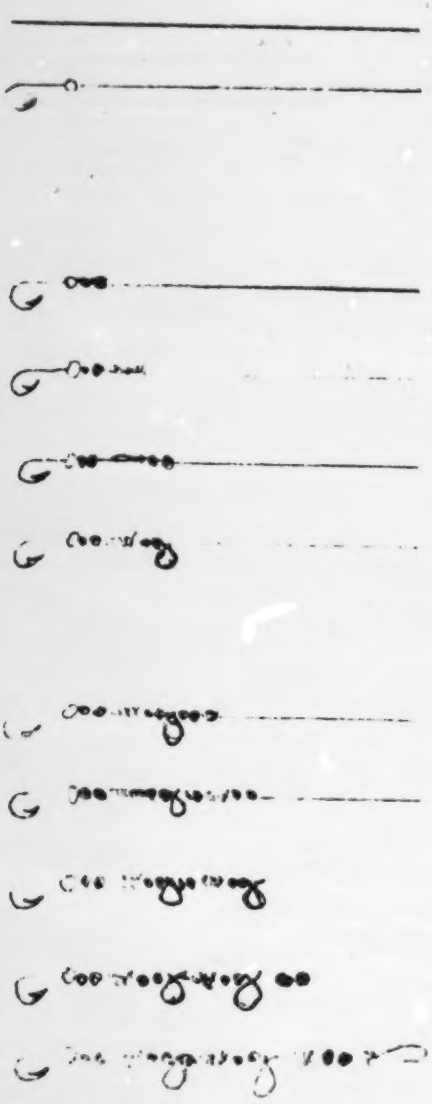

FIRST: Cut the leader to 12" length.

SECOND: Tie leader to hook (hooks are sharp to catch fish -- not fingers-- so handle them lightly.)

THIRD: Thread on two beads.

FOURTH: Thread on a spinner spring.

FIFTH: Thread on two beads.

SIXTH: Hook clevis to spinner blade and thread leader through clevis.

SEVENTH: Thread on two beads.

EIGHTH: Thread on a spinner spring.

NINTH: Thread on two beads.

TENTH: Hook clevis to spinner blade and thread leader through clevis.

ELEVENTH: Thread on two beads.

TWELFTH: Tie loop in end.

ARE YOU READY TO BREAK A RECORD?

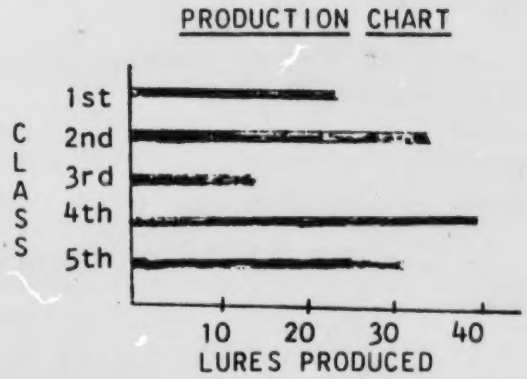

We will assemble the lures on an assembly line first. We are going to compete against other classes, so let's see how many we can make in twelve minutes. Operating an assembly line takes a good deal of planning and organization. Your instructor has already planned your production line, so he will get you in position and demonstrate your jobs, and then go, go, go!

HOW DID YOU DO?

a. How many did your group make?

b. How does this compare to the other groups? (Try making a simple chart to show this).

c. What could have been done to speed up production?

d. Do you think you will be able to produce faster by having each person put lures together by himself? Why?

LINE PRODUCTION ACTIVITY #6.

SPINNER

Do you know what makes America the mightiest industrial nation in the world? Well, of course, there are many things involved. But, if you have read your textbook carefully you know that modern productivity provides us with conveniences far beyond our basic needs.

Just what does this modern productivity mean? How did it develop? We are going to discover for ourselves by making a simple fishing lure.

Let's try two methods of making a lure. The first attempt will be with an assembly line. Each of us will put one piece on the lure as it passes by. The second attempt will be individualized, with each of us assembling a spinner by ourselves.

a. Which method do you think will be faster?

b. Why do you think it will be faster?

PENNANT

REFERENCES

1. Advance Process Supply Co., 400 North Noble St., Chicago, Illinois 60622.

2. Silk Screen Printing, by J. Eisenberg and F. Kafka, McKnight Publishing Co., Bloomington, Illinois 61701.

3. Screen Process Printing by A. Kosloff, The Signs of the Times Publishing Co., Cincinnati, Ohio.

4. The Art and Craft of Screen Process Printing, by A. Kosloff, Bruce Publishing Co., Milwaukee, Wisc.

PENNANT

JIGS AND FIXTURES

Fixture used to hold stock in position for printing operation.

Make four for each line.

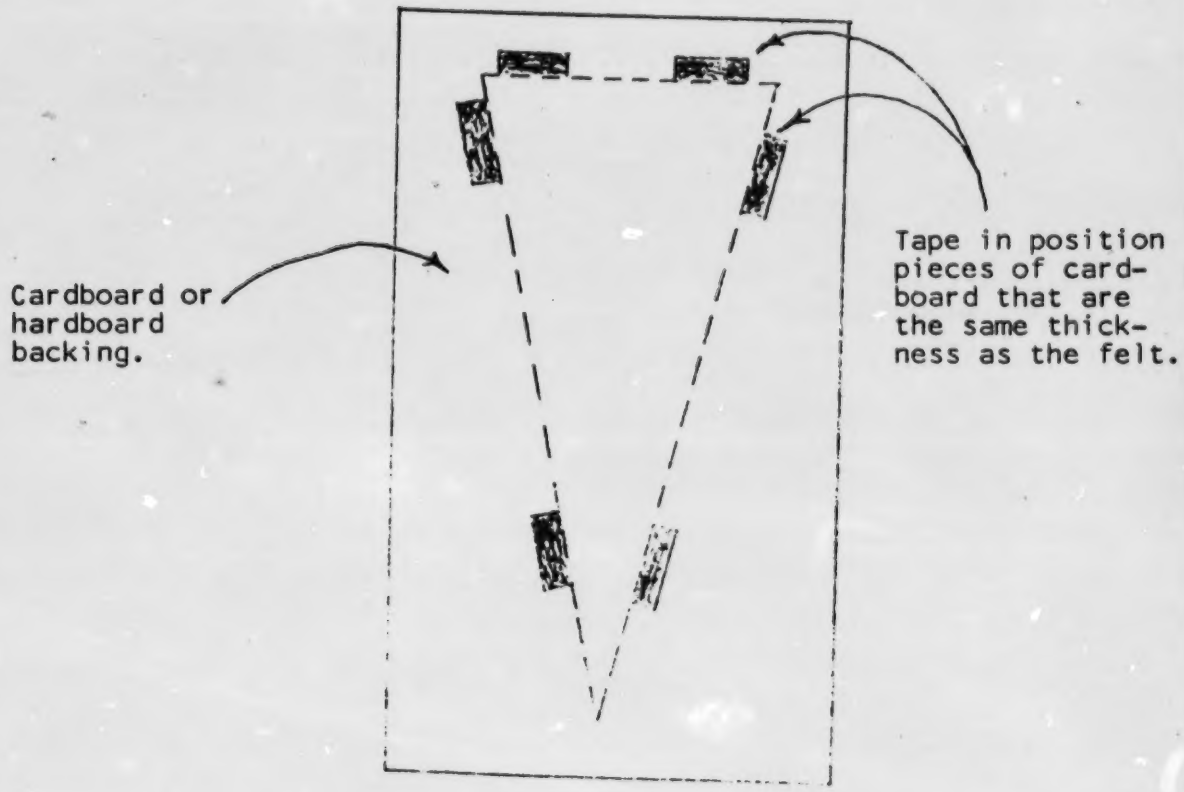

LINE PRODUCTION ACTIVITY #5

PENNANT

JIGS AND FIXTURES

Template for layout of stock and inspecting stock for size. Make three identical. Make out of hardboard or plywood.

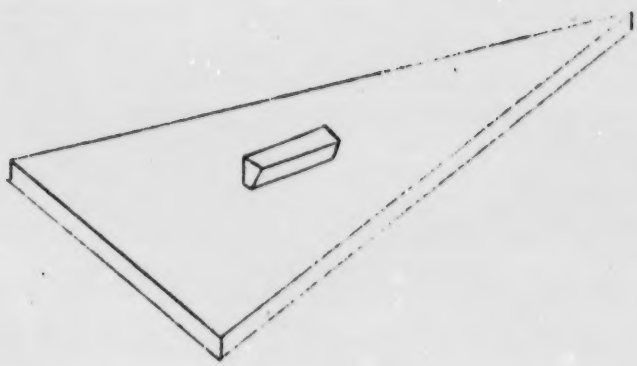

11-4 One worker will return fixtures from the out end of the screen to the in end.

11-12 One worker will inspect finished pennants.

12-13 Two workers will position wet pennants on drying table and store dry pennants.

11-13 One foreman will supervise the last two operations.

a. One foreman will supervise line one and one will supervise line two.

b. One production supervisor will supervise the overall production activity.

PENNANT

OPERATION ANALYSIS

I. Design.

A. Layout.

1. Size.

2. Mascot picture.

3. School name or initials.

4. School year (to build in obsolescence to assure a new market each year).

B. Make a finished drawing of the pennant (this job may be contracted).

II. Screen Preparation.

A. See references for procedures.

III. Production (for a class of 24). Refer to network analysis for production line for pennant.

1-2 Two workers will work stock with templates.

2-3 Three workers will cut stock.

3-4 One worker will inspect stock with a template for accuracy.

1-4 One foreman will supervise the first three operations.

4-5 One worker will position the stock on a fixture to facilitate printing. (See fixtures).

5-6 A worker will lift the top of the screen to allow insertion of the fixture with the stock to be printed. This worker also performs operations 7-8 and 9-10.

6-7 One worker will insert and position a fixture with stock on it each time the screen top is lifted.

8-9 One worker will squeeze paint through the screen on to the stock when the screen top is lowered.

10-11 One worker will remove a fixture with stock on it from the screen each time the top is lifted and separate the pennant from the fixture.

PENNANT

BILL OF MATERIAL

1. Felt: Amount to be determined by the size of the pennant wnated and the quality needed.
2. Paint: School colors.
3. Film: The size of the pennant.

Equipment:

1. Two frames with silk screen.
2. Two squeegees.
3. Templates.
4. Fixtures (see jigs and fixtures).

Printing:

See a printing catalog for details on ordering.

NETWORK ANALYSIS

PENNANT

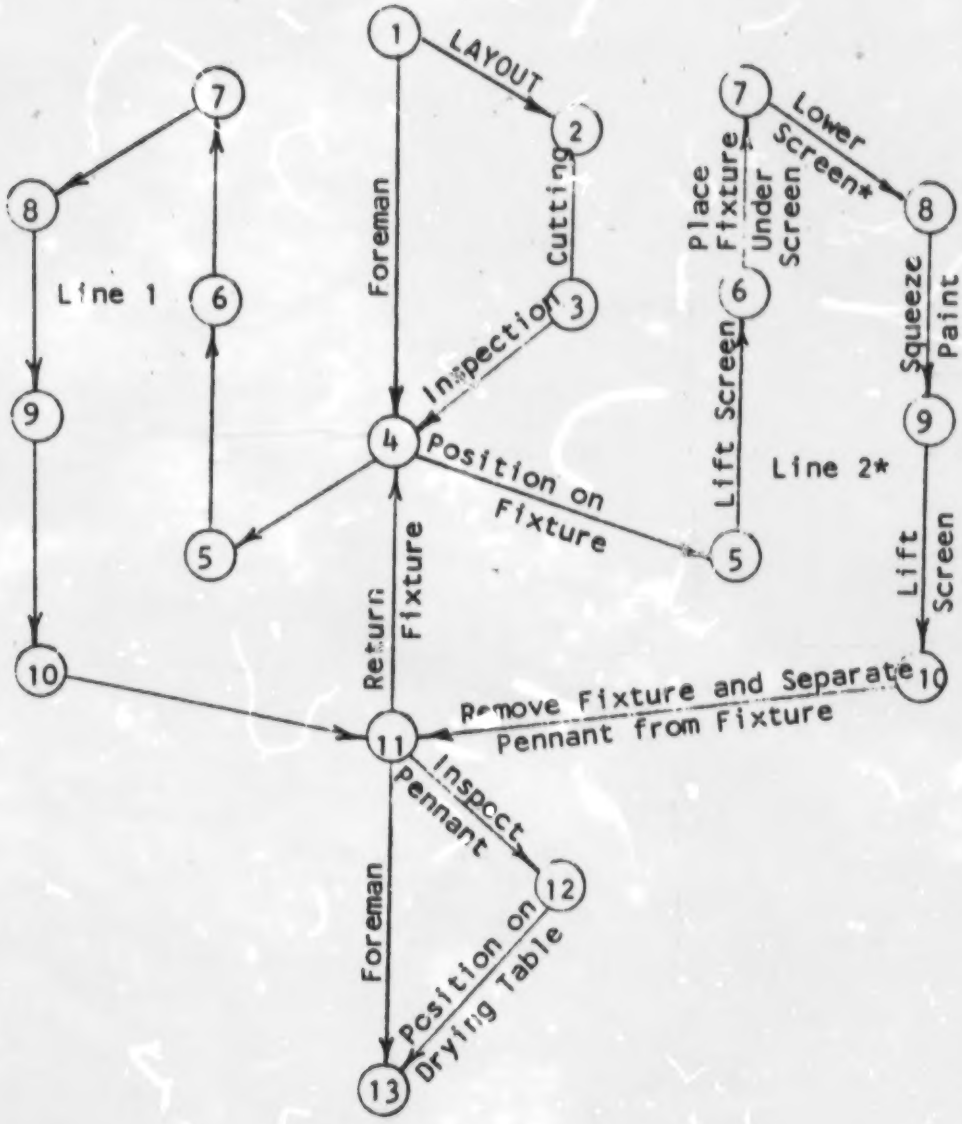

* One operator.

1. Each operation is performed by one worker unless otherwise noted.
2. One supervisor is in charge of the overall production activity.
3. One foreman supervises each line.

PENNANT

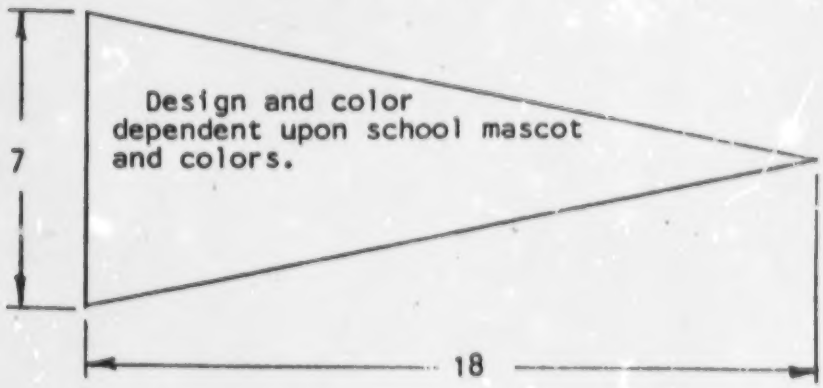

[Picture of sample on
final copy only.]

422

Scale 3/4" = 1"

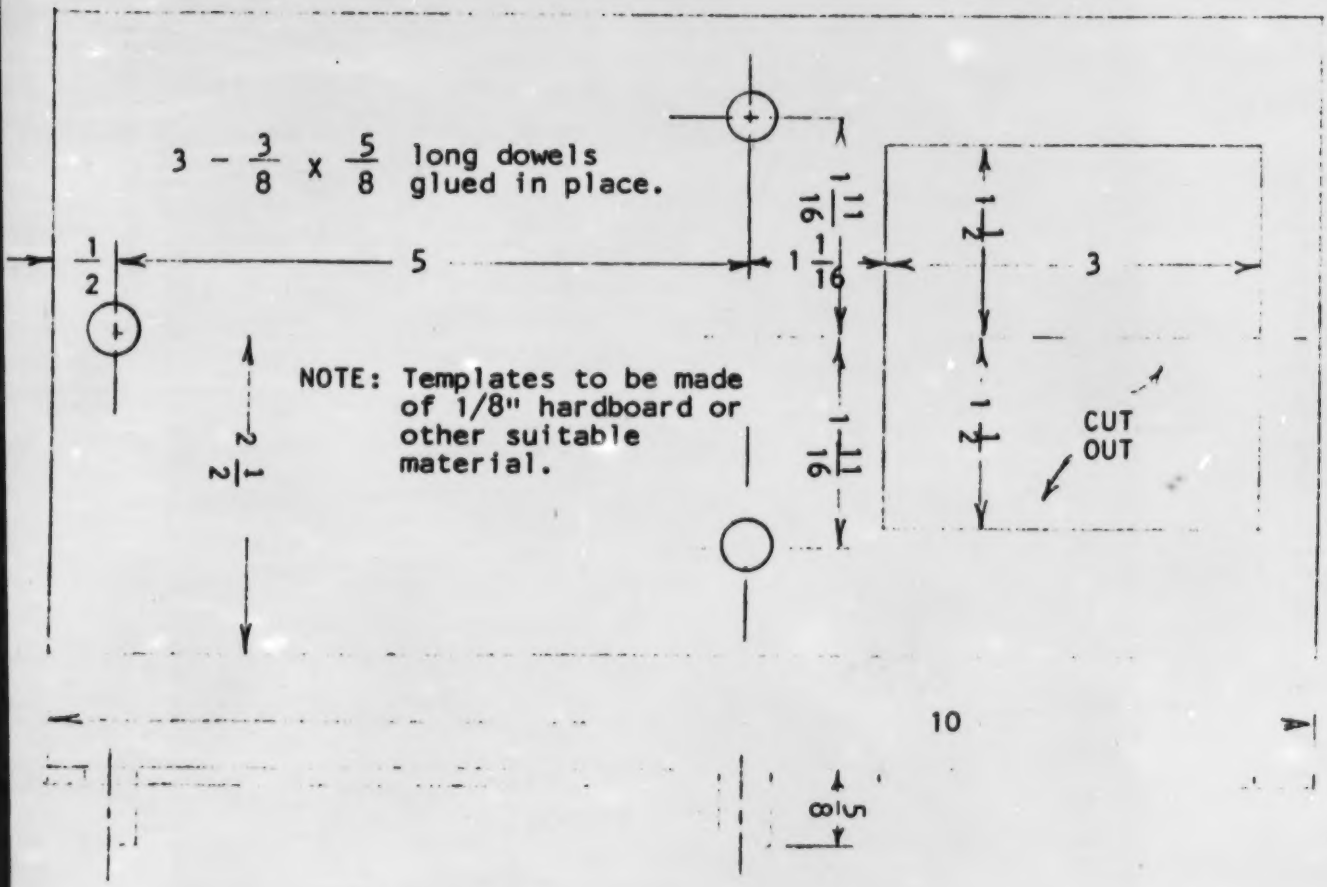

Layout Template E-E

Cement Template F-F

CHEESE BOARD

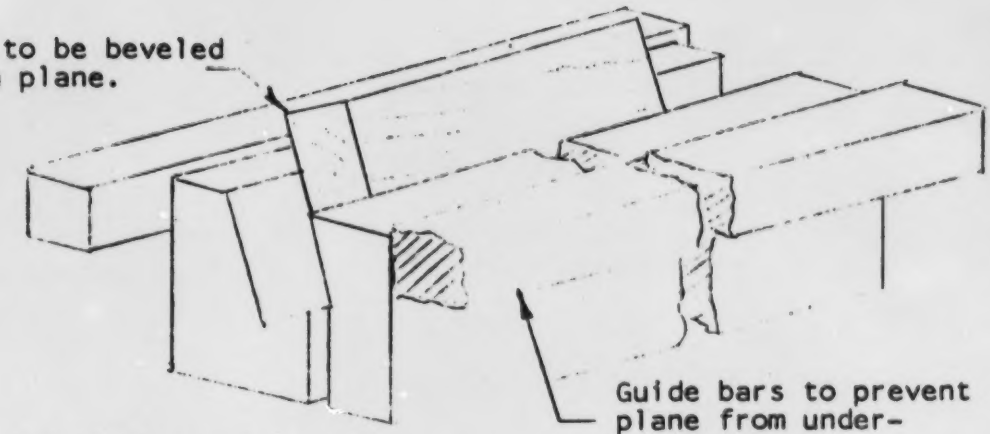

This fixture and stock can be clamped in an ordinary wood-working vise.

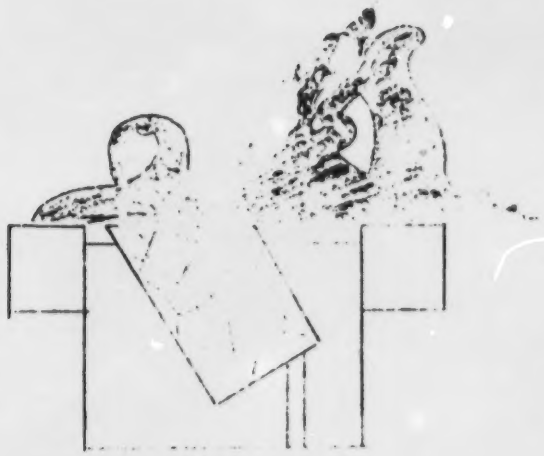

Fixture used to position the stock for planing and later sanding.

CHEESE BOARD

The maximum space between parts "A" & "B" must be no more than 1/8" less than the thickness of stock inserted between them.

A dowel to stop the forward movement of stock being cut.

1/8" over exact width of stock to permit forming of the working edge and on second fixture exact width of stock to permit cutting to exact width.

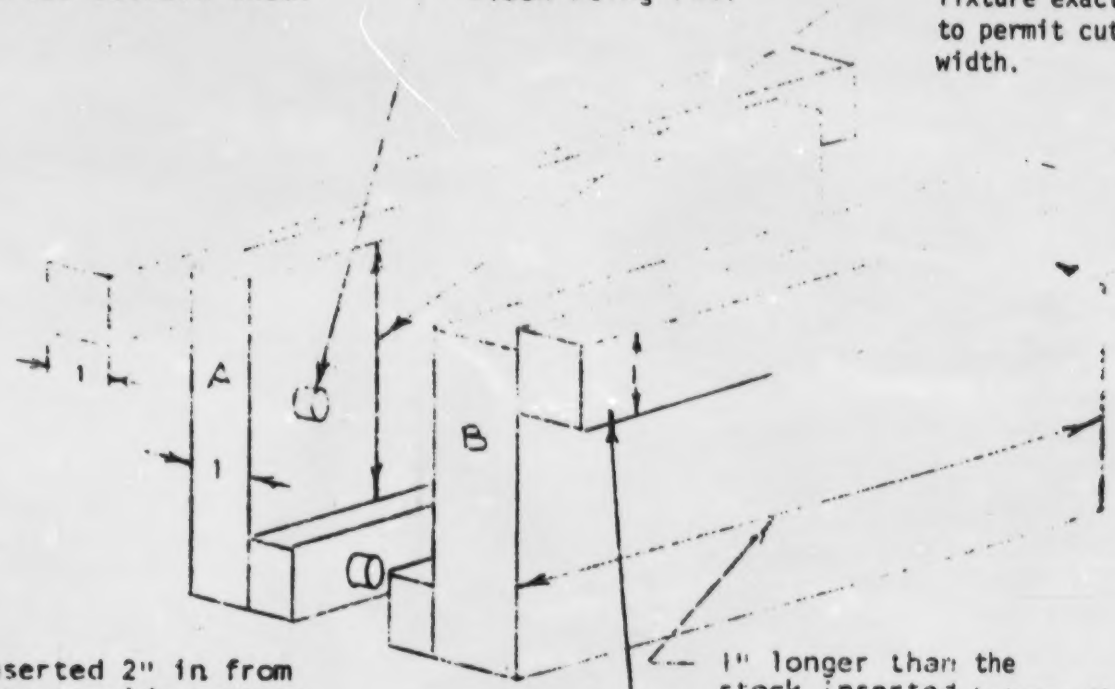

Tracks or runners raised 1/16" above parts "A" & "B" to prevent plane blade from cutting into their top surface.

425

426

Dowels inserted 2" in from each end to provide a means of sliding the two separate jaws of the jig together for clamping the stock.

1" longer than the stock inserted between them.

Must be a minimum of 2" beyond each end of parts "A" & "B".

Fixture for cutting stock to width or making a working edge.

CHEESE BOARD

The fixture illustrated below is used for sanding and planing the beveled edges of the cheese board. Space "x" to be 1/8" greater than thickness of stock to be used.

Use hardwood.

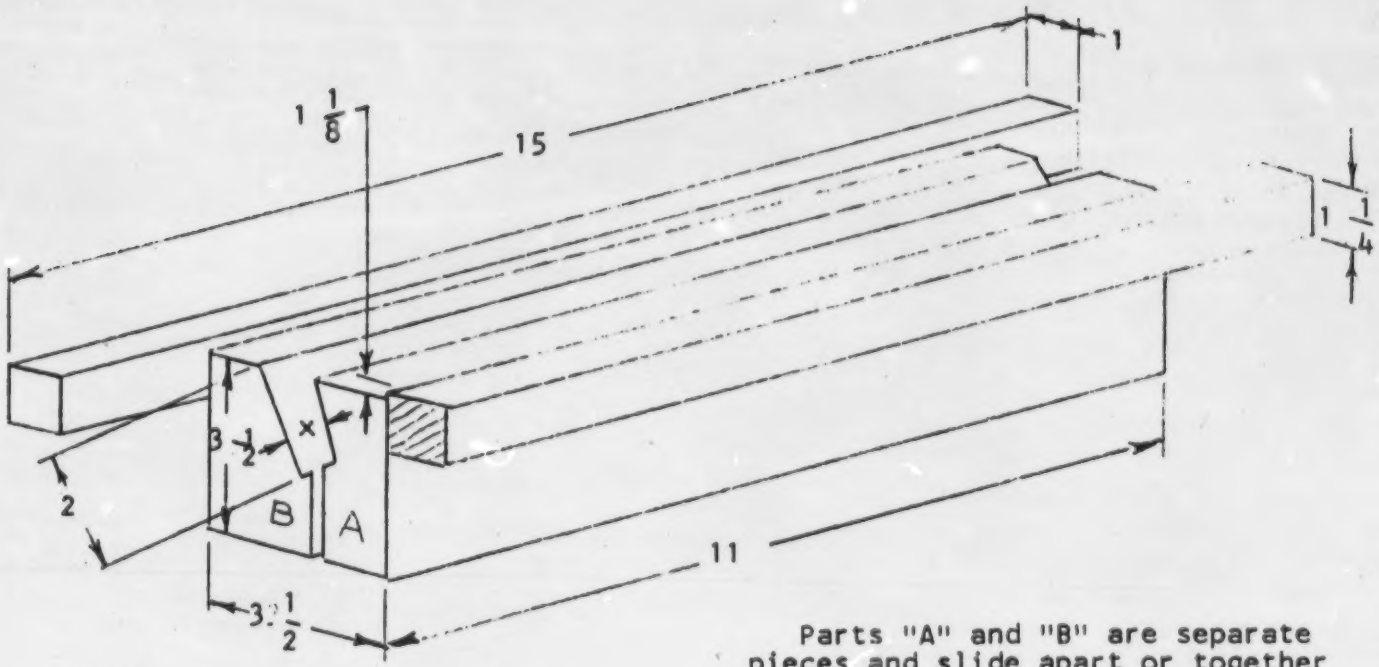

Parts "A" and "B" are separate pieces and slide apart or together on 3/8" dowels anchored in one piece.

427

Fixture for cutting a beveled edge and later sanding.

CHEESE BOARD

PRECAUTIONS

The following are areas where trouble is foreseen:

1. At the outset there will not be materials which have been processed so this will result in a good share of the workers standing idle at the start of the production run.

2. With only one man at the cut off stations, there may be a lag at this point.

3. The worker on 5-6 operation may not have enough work to keep him busy.

4. Most contact cements require approximately one-half hour to set up before the pieces may be joined. This will cause a delay prior to finishing.

PRODUCTION

CHEESE BOARD

Refer to Network Analysis.

1-2 Cut First End (1 Man): Using the cut off jig labeled A-A, one man with a back saw will cut off the first end which will also cut the desired angle. After completion of this operation, worker 1-2 will remove the stock from the jig and place it in position for the next worker to perform his operation.

2-3 Cut Second End (1 Man): Using the cut off jig labeled B-B, one man with a back saw will cut off the second end which will also cut the desired angle as well as cut the stock to finished length. After completion of this operation, worker 2-3 will remove the stock from the jig and place it in position for the next worker to perform his operation. Worker 2-3 is responsible to have every fifth piece checked by the shop foreman to maintain a standard of work which is acceptable according to the specifications.

3-4 Plane First Edge (2 Men): Using the edge planing jigs labeled C-C, two men using smooth or jack planes will plane the first edge which will form the angle on the first edge. After completion of this operation, workers 3-4 will remove the stock from the jig and place it in position for the next worker to perform his operation.

4-5 Plane Second Edge (2 Men): Using the edge planing jigs labeled D-D, two men using smooth or jack planes will plane the second edge which will form the angle on the second edge as well as cut the stock to finished width. Worker 4-5 is responsible to have every fifth piece checked by the shop foreman to maintain a standard of work which is acceptable according to the specifications.

5-6 Layout (1 Man): Using template E-E, one man will layout the area where the plastic is to be cemented. For location of the plastic, refer to the working drawings. This layout is to be done lightly with a soft pencil. Upon completion of this operation, worker 5-6 will remove the template and place the stock in position for the next operation.

6-7 Smooth Edges and Ends (3 Men): Using abrasive paper and sanding blocks, workers 6-7 will remove all marks resulting from sawing or planing from the edges and ends. When these marks have been removed, the workers should use a finer grit abrasive and lightly smooth the edges and ends. Upon completion of this operation, workers 6-7 will place the stock in position for the next operation.

7-8 Smooth Surfaces (3 Men): Using abrasive paper and sanding blocks, workers 7-8 will smooth both the top and bottom surfaces of stock so they are ready for finishing. Caution: Some care should be exercised to prevent smoothing the area where the plastic is to be cemented. This will help the bond to be stronger. Upon completion of this operation, workers 7-8 will place the stock in position for the next operation.

1-8 Smooth Edges of Plastic (2 Men): While the operations 1 through 8 are taking place, two workers using a single cut file, with which they will draw file the edges of the plastic to remove saw marks and wet or dry abrasive paper 360 to 400 grit to polish the edges. It is essential to the efficient operation of this production line that the edges of plastic are smoothed at the time operation 7-8 is completed.

8-9 Glue Plastic (1 Man): Using a contact cement which is suitable for the type of plastic selected and following manufacturer's directions, the worker will apply the cement. Using template F-F, the

worker will place the glued plastic in position and hold it in place according to manufacturer's directions. Upon completion of this operation, the stock will be placed in position for the next operation.

9-10 Inspection (1 Man): At this point, each piece off the line will be inspected to determine if the work is meeting the specifications. Those pieces which meet the specifications will be placed in position for the next operation while those which do not will be rejected.

10-11 Finish (2 Men): Using vegetable oil which may be applied by rubbing either with the bare hand or a small cloth each board will receive two coats of oil on all wood surfaces. Upon completion of this operation, all pieces will be set aside where the air can circulate about the pieces.

11-12 Package (1 Man): Using a package which meets the instructor's approval, the product will be placed in a package and stored for shipment.

1-12 Shop Foreman (1 Man): He is responsible for the entire operation and is second in command only to the instructor. All workers are to route comments to the instructor through the foreman.

CHEESE BOARD

TOOL LIST

TOOL	QUANTITY
Back Saws	2
Smooth or Jack Planes	4
Soft Pencil	1
Sanding Blocks	6
Single Cut Files	2
12" Scales	3

EXPENDABLES:

Supply of Abrasive Paper

Supply of Wet-Dry Abrasive Paper

Contact Cement

Vegetable Oil

Packages

CHEESE BOARD

MATERIALS LIST

Wood: May be any of the following:

Walnut
Cherry
Birch
Maple

Plastics: May be either formica, panelyte, or other similar material.

Wood dimensions:

1 pc. 3/4" x 3" x 9"

Plastic dimensions:

1 pc. 2-3/4" x 3"

NETWORK ANALYSIS

CHEESE BOARD

CHEESE BOARD

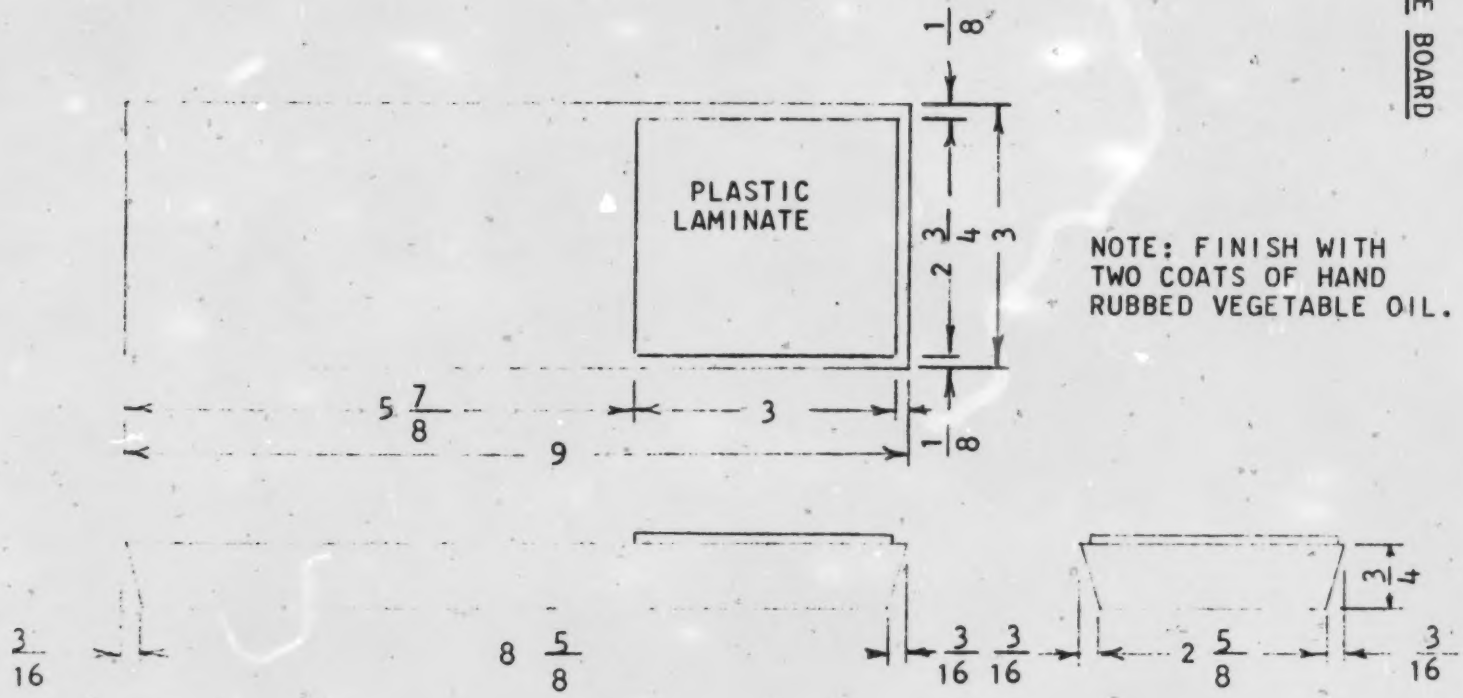

NOTE: FINISH WITH TWO COATS OF HAND RUBBED VEGETABLE OIL.

SPECIFICATIONS:

TOLERANCE FOR LENGTH & WIDTH = 1/8"
TOLERANCE FOR THICKNESS = 1/16"
TOLERANCE FOR SIZE OF PLASTIC = 1/32"
TOLERANCE FOR PLASTIC PLACEMENT = 1/32"

SCALE 1/2" = 1"

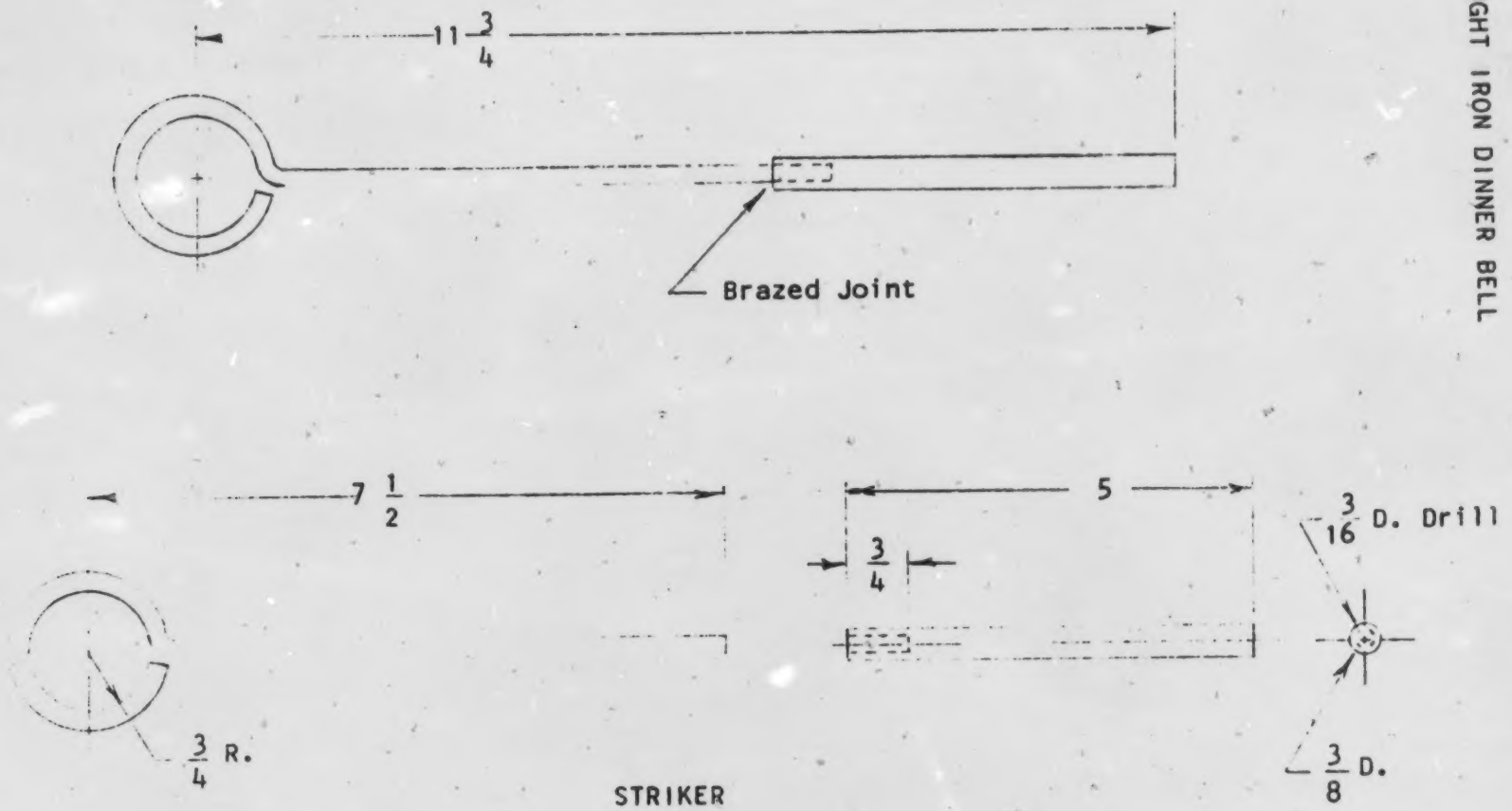

STRIKER

NOTE: Break all sharp edges.

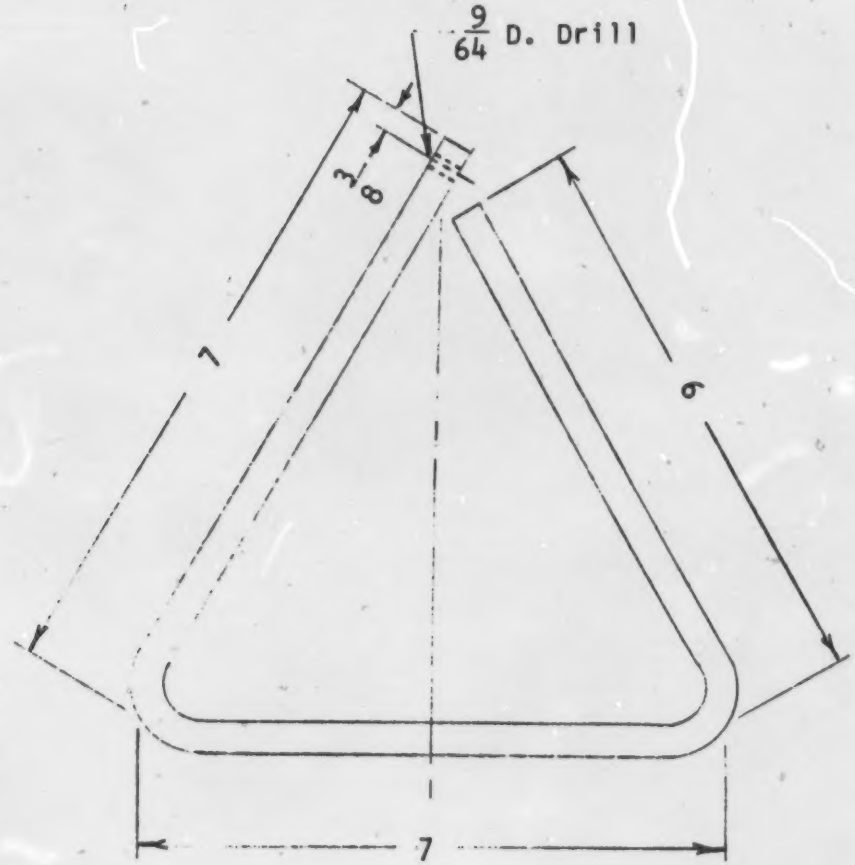

TRIANGLE

NOTE: Break all sharp edges.

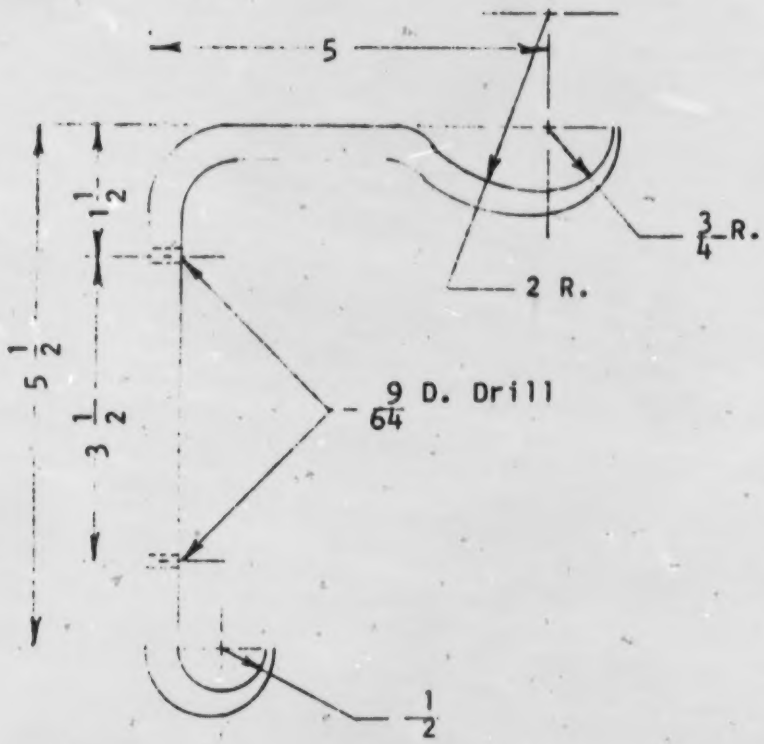

BRACKET

NOTE: Break all sharp edges.

WROUGHT IRON DINNER BELL

BILL OF MATERIALS:

Quantity	Part	Material	Size
1	Bracket	Mild steel	3/8"x3/8"x12"
1	Triangle	Mild steel	3/8"x3/8"x20"
1	Striker Handle	Mild steel	3/16" Dia. x 10"
1	Striker	Mild steel	3/8" Dia. x 5"
1	Fastener	Rawhide	1/8"x1/8"x2"

LINE PRODUCTION ACTIVITY #3

WROUGHT IRON DINNER BELL

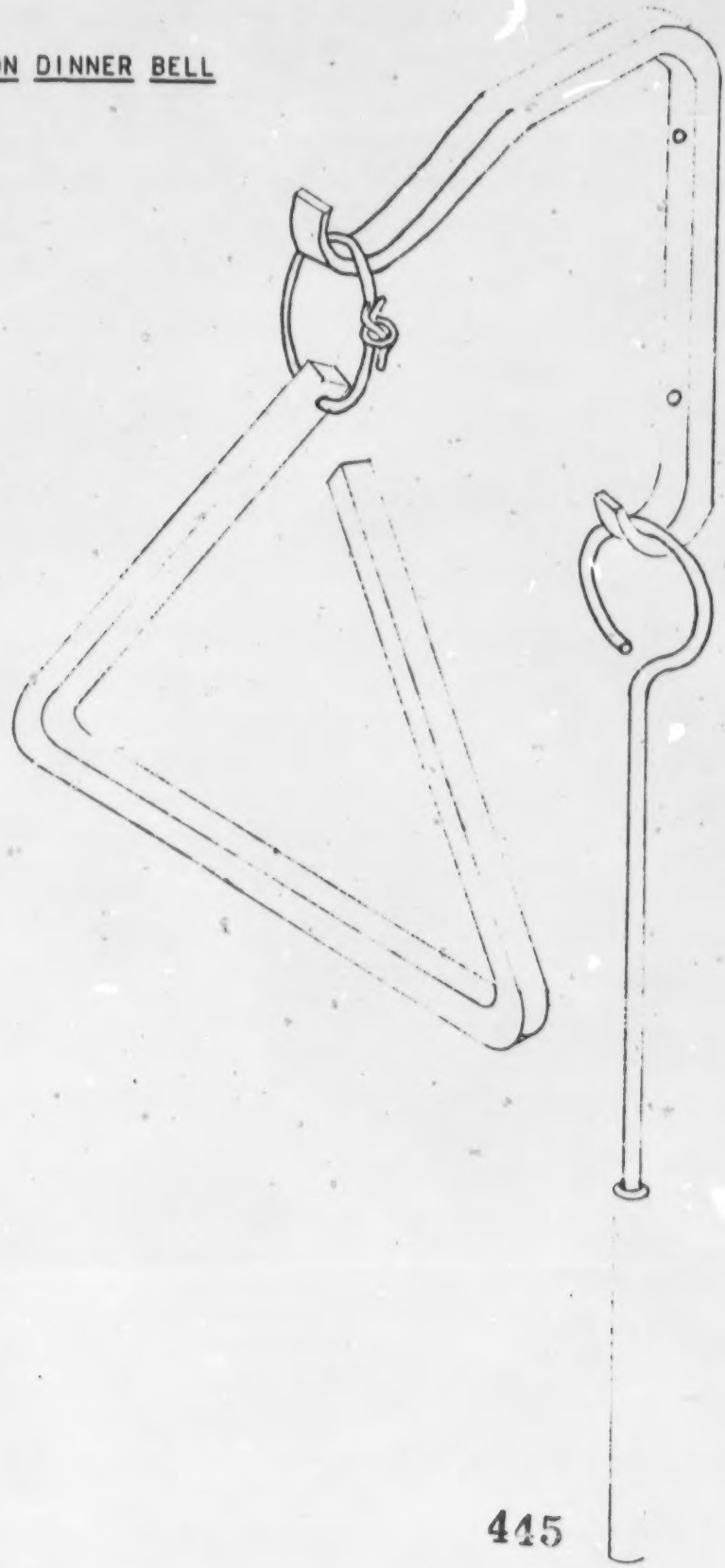

445

THE SQUARE PUZZLE

The Square Puzzle can be made by dividing the class into one or more production lines. Some lines may only use hand tools while others may use machines. Be sure to explain each operation and any safety procedures necessary.

1. Materials required: Hardboard or wood ½" x 2" x 2½"
   Number required: Minimum equal to number in class.
2. Finish: Paint or natural finish.
3. Two jigs for each line.
4. Tools and supplies: (A) handsaws or jigsaw or bandsaw (all can be used if available), (B) abrasive paper, (C) small plastic bags, (D) stapler, (E) scissors, and (F) paper.
5. Each puzzle needs four (4) pieces to form a square.
6. Suggested operational steps:
   A. Place the 2" x 2½" piece into Jig #1.
   B. Cut off waste.
   C. Place good piece into Jig #2.
   D. Cut off waste.
   E. Smooth cut edges with abrasive paper.
   F. Finish.
   G. Place 4 pieces into small plastic bag.
   H. Fold advertisement over top of bag.
   I. Staple bag closed.
7. Have someone stationed at assembly point cutting out and lettering the advertisement to be folded over the top of bag.

FULL SIZE PATTERN

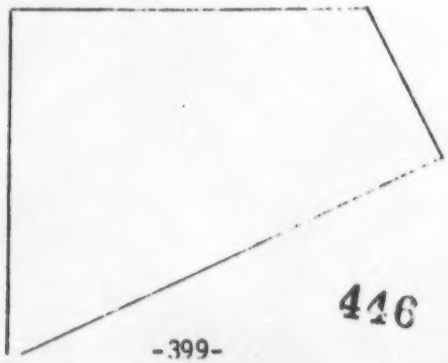

JIG #1.

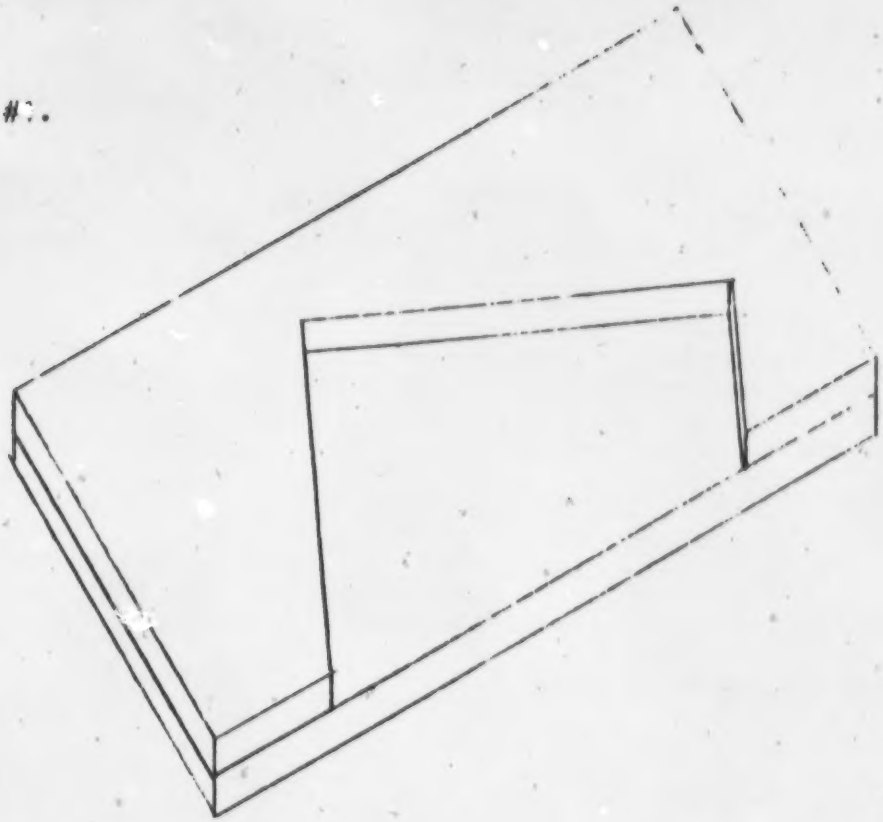

JIG #2.

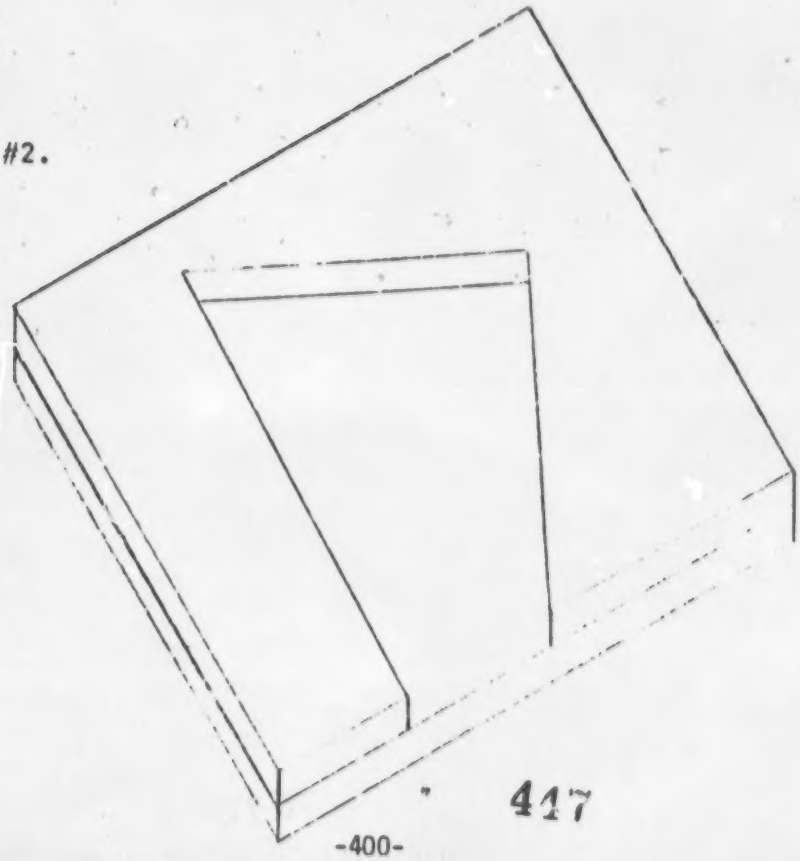

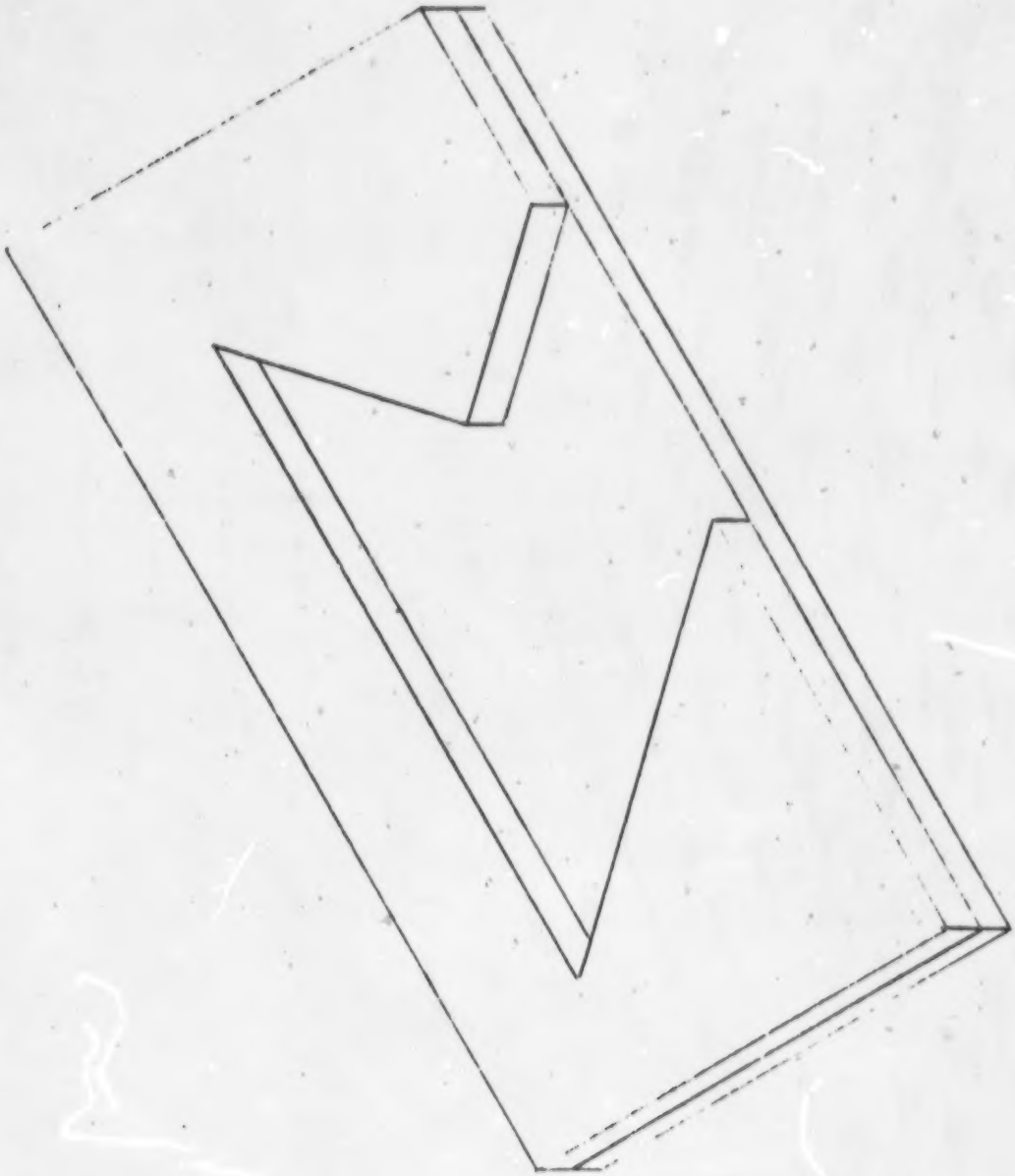

JIG #2.

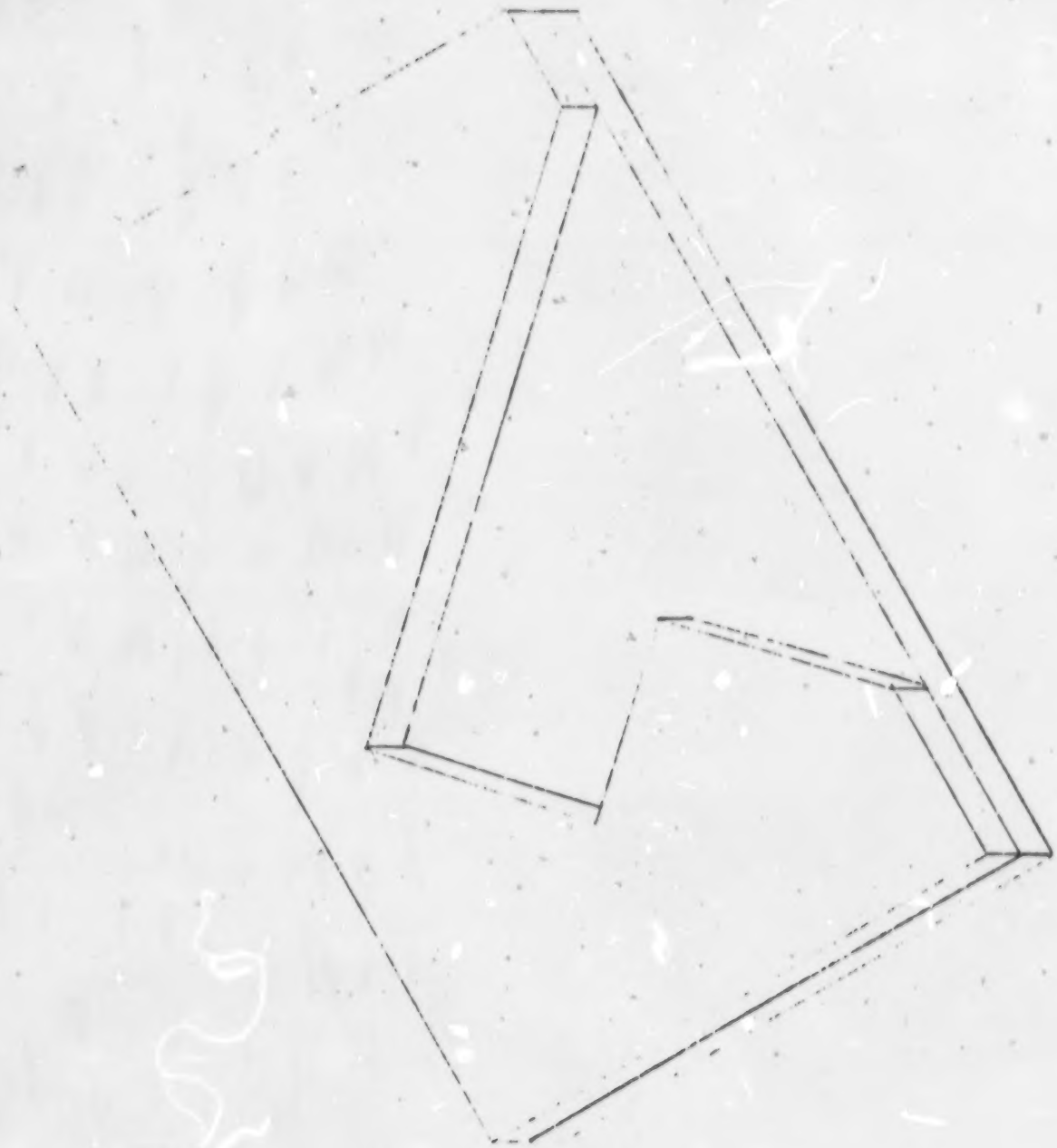

JIG #1.

PATTERN FULL SIZE:

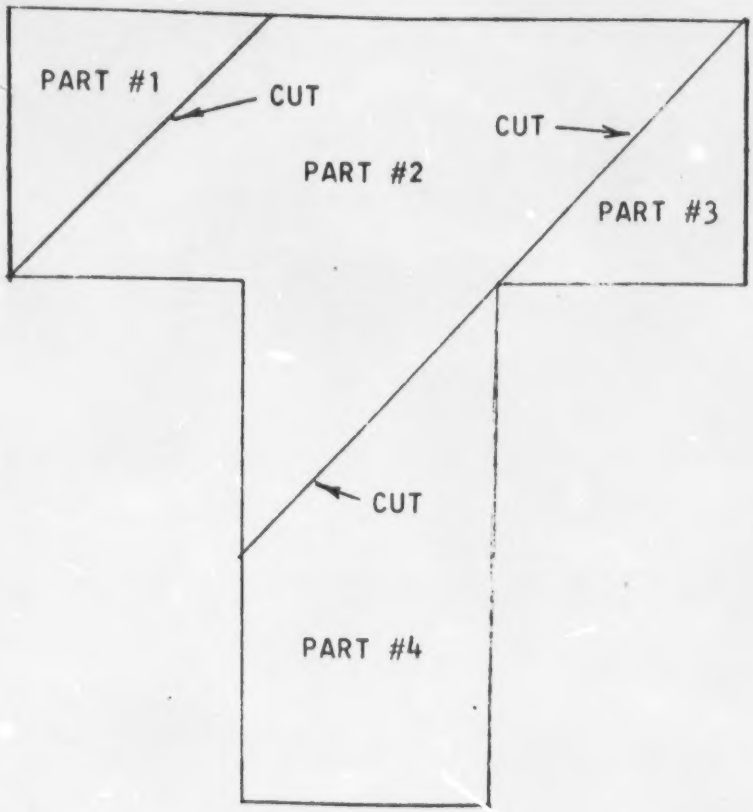

ADVERTISEMENT FOR PLASTIC BAG: Should be width of plastic bags.

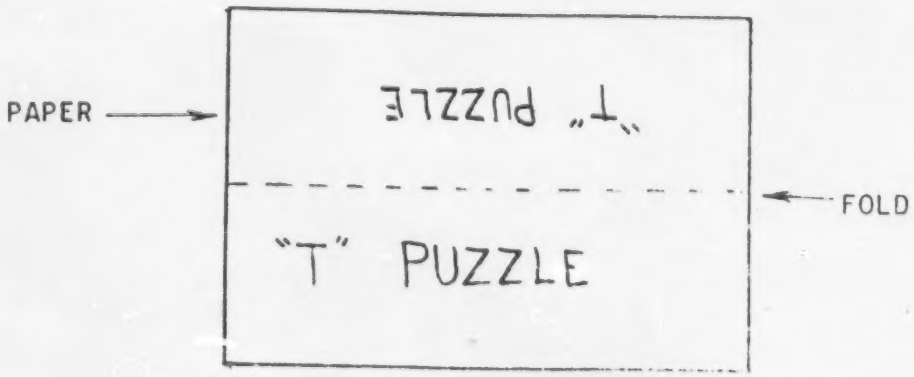

THE "T" PUZZLE

The "T" Puzzle can be made by dividing the class into one or more production lines. Some lines may only use hand tools while others may use machines. Be sure to explain each operation and any safety procedures necessary.

1. Material required: Hardboard or wood ½" x 4¼" x 4½"
   Number required: Minimum equal to number in class.

2. Finish: Paint or natural finish.

3. Pattern of "T" (one for each line).

4. Two jigs for each line.

5. Tools and supplies: (A) handsaws or jigsaw or bandsaw(all can be used if available), (B) abrasive paper, (C) small plastic bags, (D) stapler, and (E) scissors, (F) paper.

6. Suggested operational steps:

   A. Trace "T" pattern on each ½" x 4¼" x 4½" piece of material.

   B. Cut out "T" shape from each piece.

   C. Place "T" shape in Jig #1.

   D. Cut off parts #3 and #4.

   E. Place remaining piece (having parts #1 and #2) in Jig #2.

   F. Cut off part #1.

   G. Smooth all cut edges with abrasive paper.

   H. Finish all parts.

   I. Place one of each part into small plastic bag.

   J. Fold advertisement over open end of bag.

   K. Staple bag closed.

7. Have someone stationed at assembly point cutting out and lettering the advertisement to be folded over the top of bag.

LEVEL I - American Industry
UNIT I - Industry Today
Lesson 4 - The Basic Parts of Industry
Student Activity Assignment Sheet #6

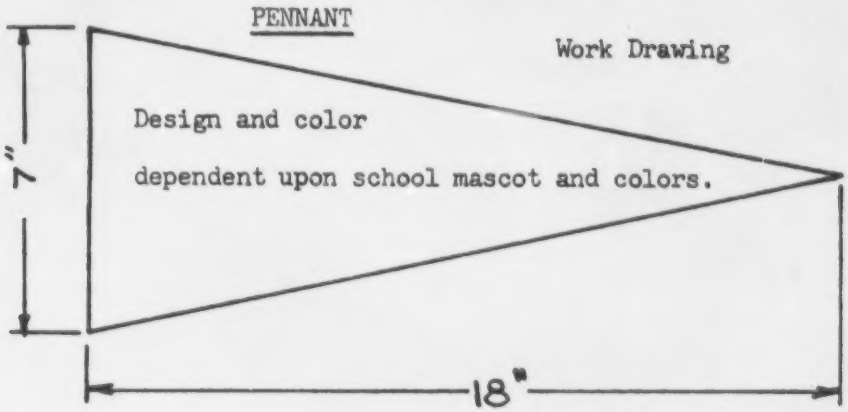

[Picture of sample on
final copy only.]

LEVEL I - American Industry
UNIT I - Industry Today
Lesson 4 - The Basic Parts of Industry
Student Activity Assignment Sheet #2

LAPEL NEEDLE PUZZLE

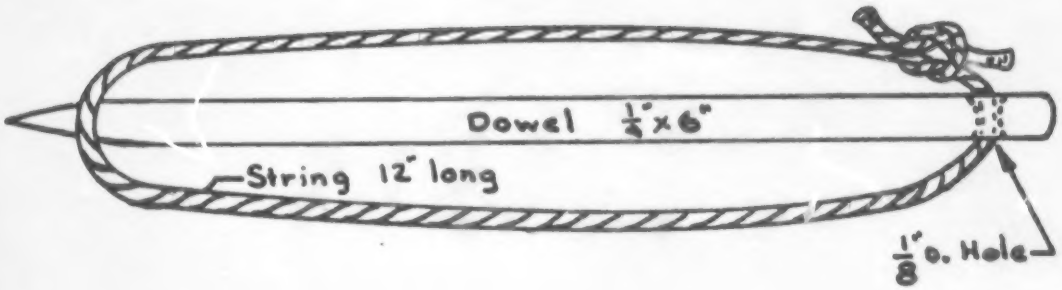

Place the string loop over a buttonhole as in a sweater, shirt or lapel and pull the buttonhole through the loop until the point of the needle can be pushed through the hole. The object is to remove the needle.

LEVEL I - American Industry
UNIT I - Industry Today
Lesson 4 - The Basic Parts of Industry
Student Activity Assignment Sheet #3

PEG PUZZLE

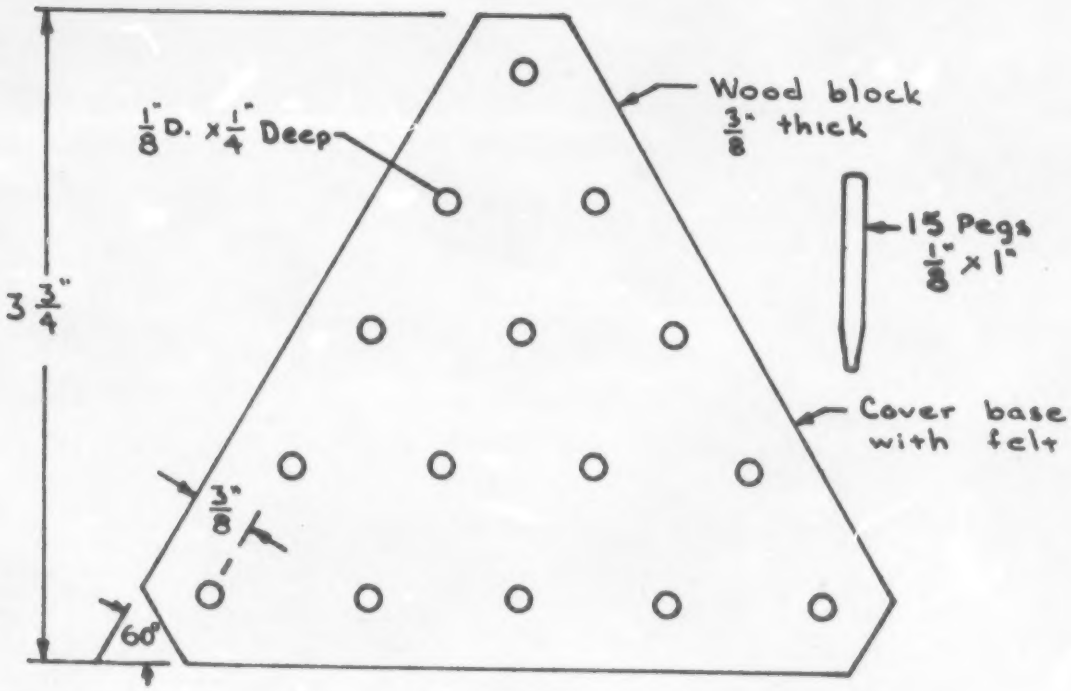

Place pegs in all except one corner hole. The object is to jump and remove pegs one at a time until only one of them is left. Jump only along the lines.

CHEESE BOARD

Scale: ½

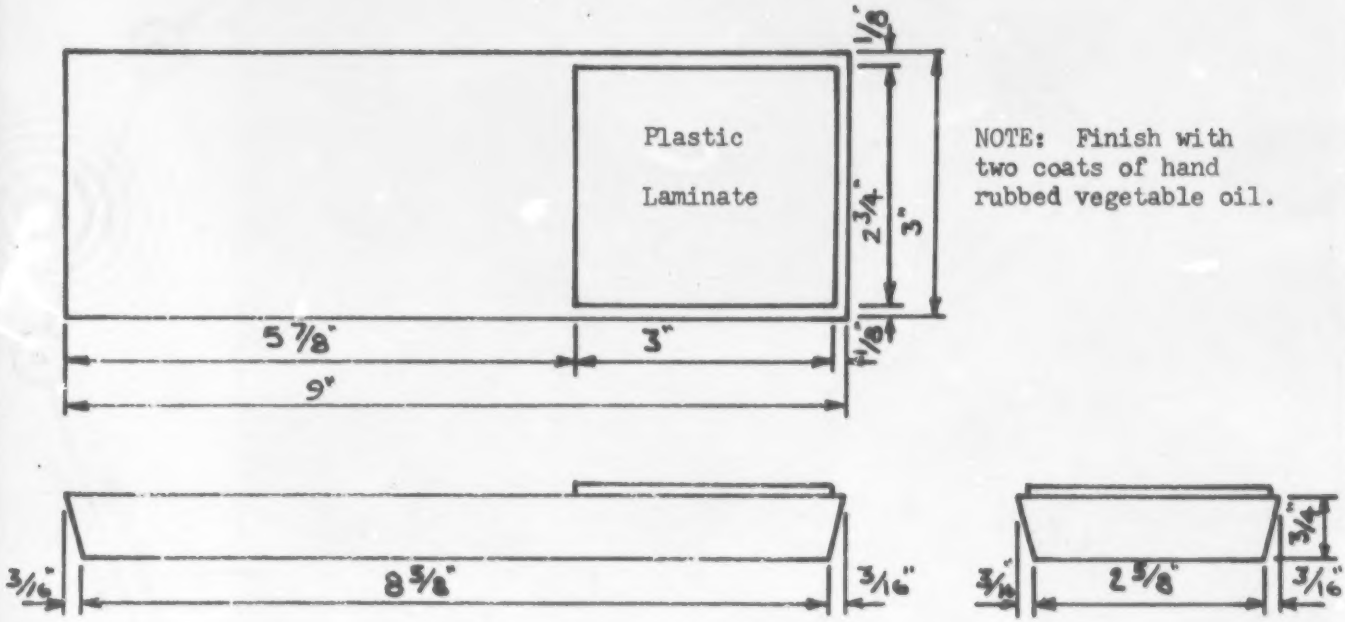

NOTE: Finish with two coats of hand rubbed vegetable oil.

Specifications:

Tolerance for length and width	1/8"
Tolerance for thickness	1/16"
Tolerance for size of plastic	1/32"
Tolerance for placement of plastic	1/32"

Work Drawing

NETWORK ANALYSIS

Cheese Board

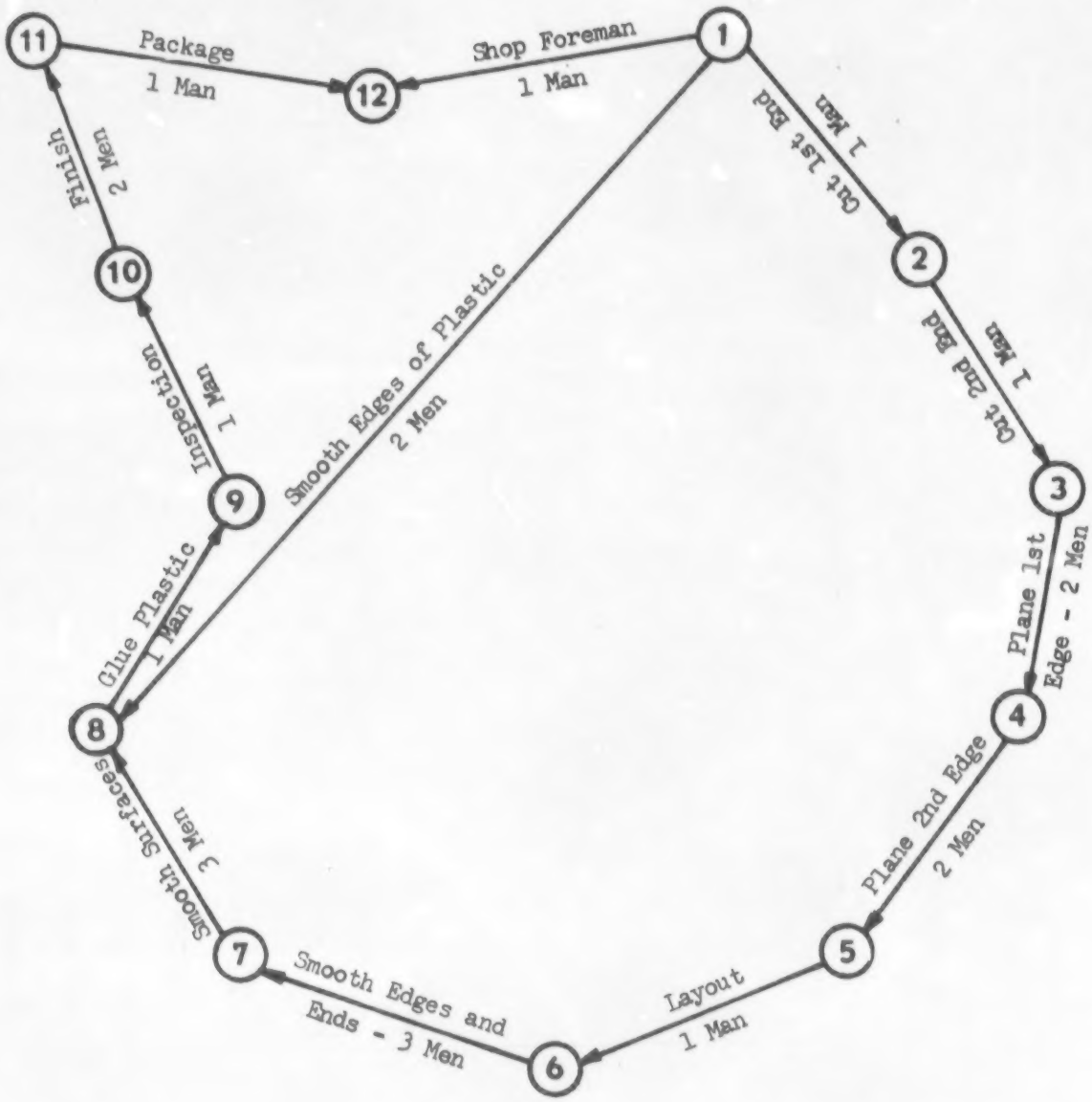

OTHER PROJECT IDEAS

Octagon Wooden Mug

Toy Airplane

Toy Grader

Toy Crane

Toy Tic Tac Toe Game

Tip Ups

School Plaque

School Pennants

Desk Caddy

Coaster Set

Driving Range

Weiner and Marshmallow Fork

Fishing Lures